AC1206GRNPOBBN102

Please contact sales for availability

AC, Ceramic, 1,000 pF, 2%, 500 VDC, C0G, SMD, MLCC, High Voltage, 1206 / 3216

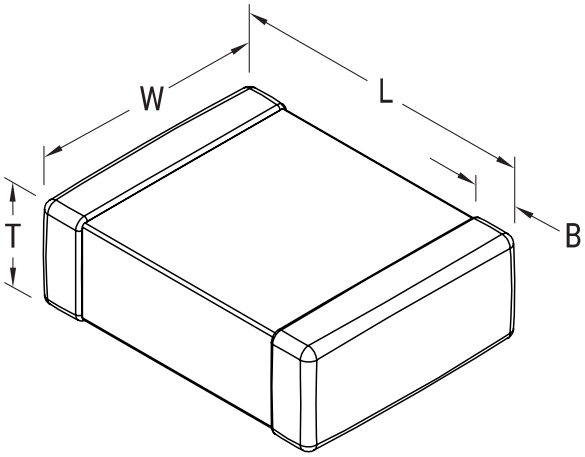

Click here for the 3D model.

General Information	
Series	AC
Style	SMD Chip
Description	SMD, MLCC, High Voltage
Features	Temperature Stable, Automotive
RoHS	Yes
Termination	Tin
Qualifications	AEC-Q200
MSL	1

Dimensions	
L	3.2mm +/-0.15mm
W	1.6mm +/-0.15mm
T	0.85mm +/-0.1mm
B	0.5mm +/-0.25mm
Case Code (EIA / mm)	1206 / 3216

Packaging Specifications	
Packaging	T&R, 178mm, Paper Tape
Packaging Quantity	4000

Specifications	
Capacitance	1,000 pF
Tolerance	2%
Voltage DC	500 VDC
Temperature Range	-55/+125°C
Temp. Coefficient	C0G
Dissipation Factor	0.1%
Insulation Resistance	100 GOhms
Endurance (% Rated voltage)	130%

Statements of suitability for certain applications are based on our knowledge of typical operating conditions for such applications, but are not intended to constitute - and we specifically disclaim - any warranty concerning suitability for a specific customer application or use. This Information is intended for use only by customers who have the requisite experience and capability to determine the correct products for their application. Any technical advice inferred from this Information or otherwise provided by us with reference to the use of our products is given gratis, and we assume no obligation or liability for the advice given or results obtained.

© 2006 - 2026 YAGEO