AC1206KKX7R9BB154

AC, Ceramic, 0.15 uF, 10%, 50 VDC, X7R, SMD, MLCC, Automotive, 1206 / 3216

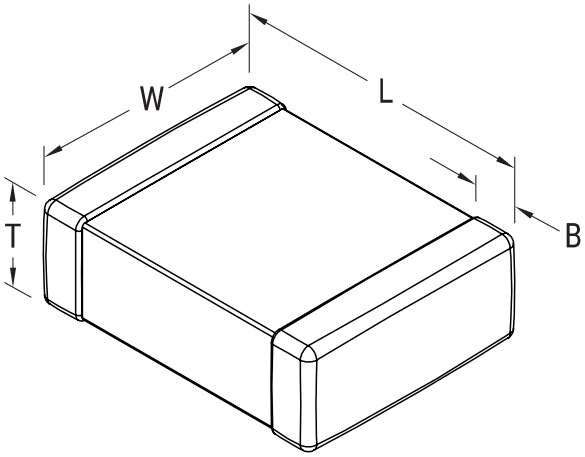

General Information	
Series	AC
Style	SMD Chip
Description	SMD, MLCC, Automotive
Features	Temperature Stable, Automotive
RoHS	Yes
Termination	Tin
Qualifications	AEC-Q200
MSL	1

Dimensions	
L	3.2mm +/-0.3mm
W	1.6mm +/-0.2mm
T	1.25mm +/-0.2mm
B	0.5mm +/-0.25mm
Case Code (EIA / mm)	1206 / 3216

Packaging Specifications	
Packaging	T&R, 180mm, Plastic Tape
Packaging Quantity	3000

Specifications	
Capacitance	0.15 uF
Tolerance	10%
Voltage DC	50 VDC
Temperature Range	-55/+125°C
Temp. Coefficient	X7R
Dissipation Factor	2.5%
Insulation Resistance	3.3 GOhms
Endurance (% Rated voltage)	200%

Statements of suitability for certain applications are based on our knowledge of typical operating conditions for such applications, but are not intended to constitute - and we specifically disclaim - any warranty concerning suitability for a specific customer application or use. This Information is intended for use only by customers who have the requisite experience and capability to determine the correct products for their application. Any technical advice inferred from this Information or otherwise provided by us with reference to the use of our products is given gratis, and we assume no obligation or liability for the advice given or results obtained.

© 2006 - 2026 YAGEO