# C0805H910F4GAC7292

SMD Indust C0G HT200C, Ceramic, 91 pF, 1%, 16 VDC, C0G, SMD, MLCC, High Temperature, Ultra-Stable, Low Loss, 0805 / 2012

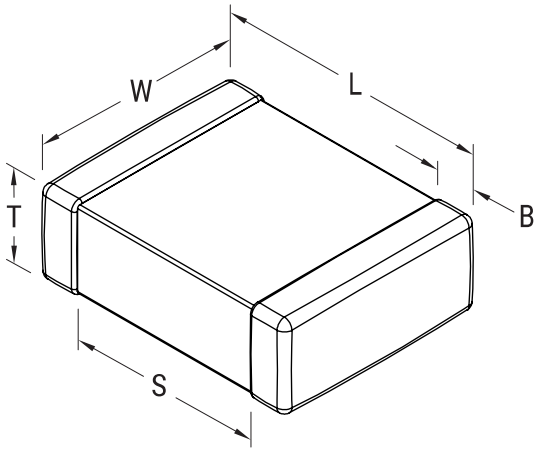


Click here for the 3D model.

| General Information | |
|---|---|
| Series | SMD Indust C0G HT200C |
| Style | SMD Chip |
| Description | SMD, MLCC, High Temperature, Ultra-Stable, Low Loss |
| Features | High Temp, Ultra-Stable, Low Loss |
| RoHS | Yes |
| Termination | Tin |
| Marking | No |
| Typical Component Weight | 11 mg |
| Shelf Life | 78 Weeks |
| MSL | 1 |

| Dimensions | |
|---|---|
| L | 2mm +/-0.2mm |
| W | 1.25mm +/-0.2mm |
| T | 0.78mm +/-0.10mm |
| S | 0.7mm MIN |
| B | 0.5mm +/-0.25mm |
| Case Code (EIA / mm) | 0805 / 2012 |

| Packaging Specifications | |
|---|---|
| Packaging | Waffle, Tray |
| Packaging Quantity | 1 |

| Specifications | |
|---|---|
| Capacitance | 91 pF |
| Measurement Condition | 1 MHz 1.0Vrms |
| Tolerance | 1% |
| Voltage DC | 16 VDC |
| Dielectric Withstanding Voltage | 40 VDC |
| Temperature Range | -55/+200°C |
| Temp. Coefficient | C0G |
| Capacitance Change with Reference to +25°C and 0 VDC Applied (TCC) | 30 ppm/C, 1MegaHz 1.0Vrms |
| Dissipation Factor | 0.1% 1 MHz 1.0Vrms |
| Aging Rate | 0% Loss/Decade Hour |
| Insulation Resistance | 100 GOhms |

Statements of suitability for certain applications are based on our knowledge of typical operating conditions for such applications, but are not intended to constitute - and we specifically disclaim - any warranty concerning suitability for a specific customer application or use. This Information is intended for use only by customers who have the requisite experience and capability to determine the correct products for their application. Any technical advice inferred from this Information or otherwise provided by us with reference to the use of our products is given gratis, and we assume no obligation or liability for the advice given or results obtained.



© 2006 - 2026 YAGEO