C0805Q820M2GAC7189

GR900 SMD Space BP, Ceramic, 82 pF, 20%, 200 VDC, BP, N/A, 0805 / 2012

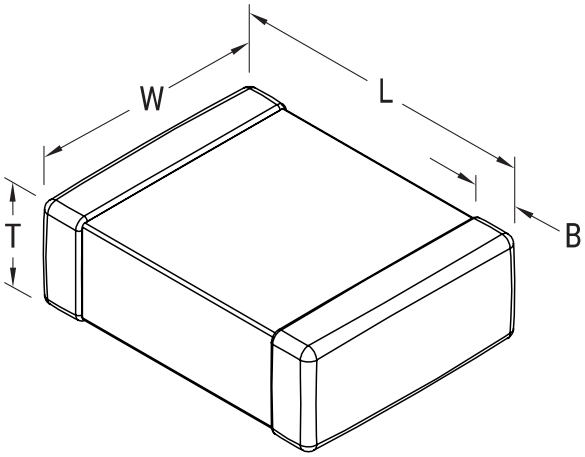

Click here for the 3D model.

General Information	
Series	GR900 SMD Space BP
Style	SMD Chip
RoHS	Yes
Termination	Tin
Failure Rate	N/A
Testing and Reliability	Mil-PRF-123 Group A
Qualifications	MIL-PRF-123 Group A
Shelf Life	78 Weeks
MSL	1

Dimensions	
L	2.03mm +/-0.38mm
W	1.27mm +/-0.38mm
T	1.4mm MAX
B	0.51mm +/-0.25mm
Case Code (EIA / mm)	0805 / 2012

Specifications	
Capacitance	82 pF
Tolerance	20%
Voltage DC	200 VDC
Temperature Range	-55/+125°C
Temp. Coefficient	BP

Packaging Specifications	
Packaging	T&R, Plastic Tape

Statements of suitability for certain applications are based on our knowledge of typical operating conditions for such applications, but are not intended to constitute - and we specifically disclaim - any warranty concerning suitability for a specific customer application or use. This Information is intended for use only by customers who have the requisite experience and capability to determine the correct products for their application. Any technical advice inferred from this Information or otherwise provided by us with reference to the use of our products is given gratis, and we assume no obligation or liability for the advice given or results obtained.

© 2006 - 2026 YAGEO