C0805T131M3RCC7138

SMD COTS X7R, Ceramic, 130 pF, 20%, 25 VDC, X7R, SMD, MLCC, COTS, Temperature Stable, Class II, 0805 / 2012

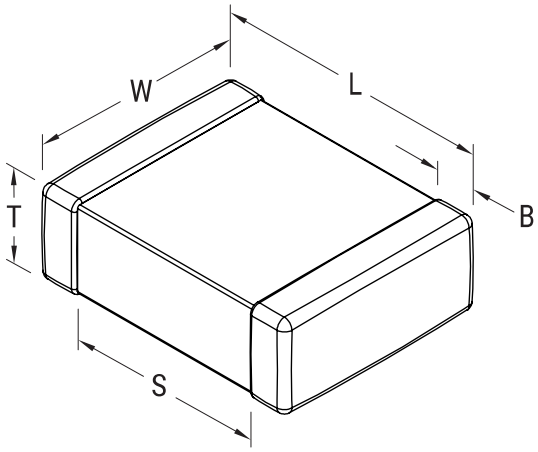

Click here for the 3D model.

General Information	
Series	SMD COTS X7R
Style	SMD Chip
Description	SMD, MLCC, COTS, Temperature Stable, Class II
Features	Temperature Stable, Class II
RoHS	Yes
Termination	Tin
Marking	No
Failure Rate	Testing per MIL-PRF-55681 PDA 8%, DPA per EIA-469, Humidity per MIL-STD-202, Method 103, Condition A
Typical Component Weight	11 mg
Shelf Life	78 Weeks
MSL	1

Dimensions	
L	2mm +/-0.2mm
W	1.25mm +/-0.2mm
T	0.78mm +/-0.10mm
S	0.7mm MIN
B	0.5mm +/-0.25mm
Case Code (EIA / mm)	0805 / 2012

Packaging Specifications	
Packaging	T&R, 330mm, Paper Tape
Packaging Quantity	15000

Specifications	
Capacitance	130 pF
Measurement Condition	1 kHz 1.0Vrms
Tolerance	20%
Voltage DC	25 VDC
Dielectric Withstanding Voltage	62.5 VDC
Temperature Range	-55/+125°C
Temp. Coefficient	X7R
Capacitance Change with Reference to +25°C and 0 VDC Applied (TCC)	15%, 1kHz 1.0Vrms
Dissipation Factor	3.5% 1 kHz 1.0Vrms
Aging Rate	3% Loss/Decade Hour: Referee Time is 1000 Hours
Insulation Resistance	100 GOhms

Statements of suitability for certain applications are based on our knowledge of typical operating conditions for such applications, but are not intended to constitute - and we specifically disclaim - any warranty concerning suitability for a specific customer application or use. This Information is intended for use only by customers who have the requisite experience and capability to determine the correct products for their application. Any technical advice inferred from this Information or otherwise provided by us with reference to the use of our products is given gratis, and we assume no obligation or liability for the advice given or results obtained.

© 2006 - 2026 YAGEO