C1206C334M3VAC7215

SMD Comm Y5V, Ceramic, 0.33 uF, 20%, 25 VDC, Y5V, SMD, MLCC, General Purpose, Class III, 1206 / 3216

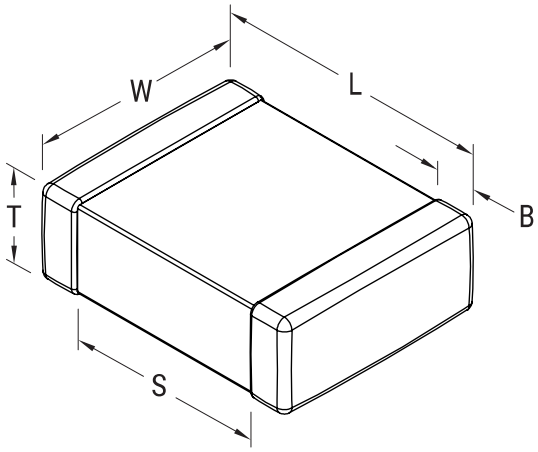

Click here for the 3D model.

General Information	
Series	SMD Comm Y5V
Style	SMD Chip
Description	SMD, MLCC, General Purpose, Class III
Features	Class III
RoHS	Yes
Termination	Tin
Marking	Yes
Typical Component Weight	17 mg
Shelf Life	78 Weeks
MSL	1

Dimensions	
L	3.2mm +/-0.2mm
W	1.6mm +/-0.2mm
T	0.78mm +/-0.10mm
S	1.5mm MIN
B	0.5mm +/-0.25mm
Case Code (EIA / mm)	1206 / 3216

Packaging Specifications	
Packaging	T&R, 330mm, Plastic Tape
Packaging Quantity	10000

Specifications	
Capacitance	0.33 uF
Measurement Condition	1 kHz 1.0Vrms
Tolerance	20%
Voltage DC	25 VDC
Dielectric Withstanding Voltage	62.5 VDC
Temperature Range	-30/+85°C
Temp. Coefficient	Y5V
Capacitance Change with Reference to +25°C and 0 VDC Applied (TCC)	+22%/-82%, 1kHz 1.0Vrms
Dissipation Factor	7% 1 kHz 1.0Vrms
Aging Rate	7% Loss/Decade Hour: Referee Time is 1000 Hours
Insulation Resistance	303 MOhms

Statements of suitability for certain applications are based on our knowledge of typical operating conditions for such applications, but are not intended to constitute - and we specifically disclaim - any warranty concerning suitability for a specific customer application or use. This Information is intended for use only by customers who have the requisite experience and capability to determine the correct products for their application. Any technical advice inferred from this Information or otherwise provided by us with reference to the use of our products is given gratis, and we assume no obligation or liability for the advice given or results obtained.

© 2006 - 2026 YAGEO