C1206S331JFGACTU

Aliases (C1206S331JFGAC7800)

SMD Comm C0G HV FE, Ceramic, 330 pF, 5%, 1,500 VDC, C0G, SMD, MLCC, FE-CAP, Floating Electrode, High Voltage, 1206 / 3216

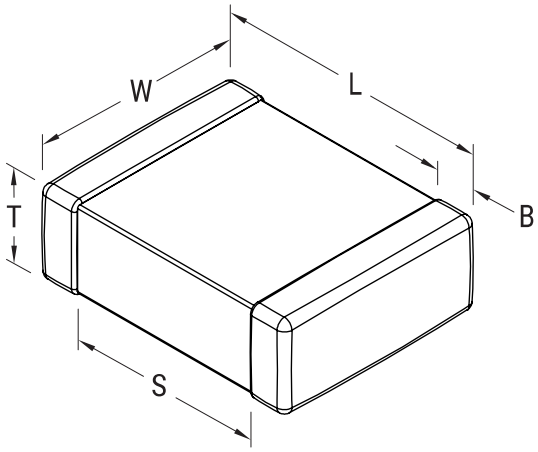

Click here for the 3D model.

General Information	
Series	SMD Comm C0G HV FE
Style	SMD Chip
Description	SMD, MLCC, FE-CAP, Floating Electrode, High Voltage
Features	FE-CAP, Floating Electrode, High Voltage
RoHS	Yes
Termination	Tin
Marking	No
Typical Component Weight	36 mg
Shelf Life	78 Weeks
MSL	1

Dimensions	
L	3.2mm +/-0.2mm
W	1.6mm +/-0.2mm
T	1.6mm +/-0.15mm
S	1.5mm MIN
B	0.5mm +/-0.25mm
Case Code (EIA / mm)	1206 / 3216

Packaging Specifications	
Packaging	T&R, 180mm, Plastic Tape
Packaging Quantity	2000

Specifications	
Capacitance	330 pF
Measurement Condition	1 MHz 1.0Vrms
Tolerance	5%
Voltage DC	1500 VDC
Dielectric Withstanding Voltage	1,800 VDC
Temperature Range	-55/+125°C
Temp. Coefficient	C0G
Capacitance Change with Reference to +25°C and 0 VDC Applied (TCC)	30 ppm/C, 1MegaHz 1.0Vrms
Dissipation Factor	0.1% 1 MHz 1.0Vrms
Aging Rate	0% Loss/Decade Hour
Insulation Resistance	100 GOhms

Statements of suitability for certain applications are based on our knowledge of typical operating conditions for such applications, but are not intended to constitute - and we specifically disclaim - any warranty concerning suitability for a specific customer application or use. This Information is intended for use only by customers who have the requisite experience and capability to determine the correct products for their application. Any technical advice inferred from this Information or otherwise provided by us with reference to the use of our products is given gratis, and we assume no obligation or liability for the advice given or results obtained.

© 2006 - 2026 YAGEO