# C1210T131M4RAC7138

SMD COTS X7R, Ceramic, 130 pF, 20%, 16 VDC, X7R, SMD, MLCC, COTS, Temperature Stable, Class II, 1210 / 3225

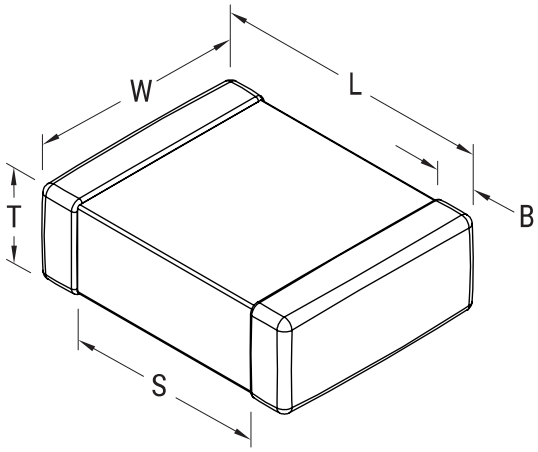


Click here for the 3D model.

| General Information | |
|---|---|
| Series | SMD COTS X7R |
| Style | SMD Chip |
| Description | SMD, MLCC, COTS, Temperature Stable, Class II |
| Features | Temperature Stable, Class II |
| RoHS | Yes |
| Termination | Tin |
| Marking | No |
| Failure Rate | Testing per MIL-PRF-55681 PDA 8% |
| Typical Component Weight | 40 mg |
| Shelf Life | 78 Weeks |
| MSL | 1 |

| Dimensions | |
|---|---|
| L | 3.2mm +/-0.2mm |
| W | 2.5mm +/-0.2mm |
| T | 0.78mm +/-0.10mm |
| S | 1.5mm MIN |
| B | 0.5mm +/-0.25mm |
| Case Code (EIA / mm) | 1210 / 3225 |

| Packaging Specifications | |
|---|---|
| Packaging | T&R, 330mm, Plastic Tape |
| Packaging Quantity | 10000 |

| Specifications | |
|---|---|
| Capacitance | 130 pF |
| Measurement Condition | 1 kHz 1.0Vrms |
| Tolerance | 20% |
| Voltage DC | 16 VDC |
| Dielectric Withstanding Voltage | 40 VDC |
| Temperature Range | -55/+125°C |
| Temp. Coefficient | X7R |
| Capacitance Change with Reference to +25°C and 0 VDC Applied (TCC) | 15%, 1kHz 1.0Vrms |
| Dissipation Factor | 3.5% 1 kHz 1.0Vrms |
| Aging Rate | 3% Loss/Decade Hour: Referee Time is 1000 Hours |
| Insulation Resistance | 100 GOhms |

Statements of suitability for certain applications are based on our knowledge of typical operating conditions for such applications, but are not intended to constitute - and we specifically disclaim - any warranty concerning suitability for a specific customer application or use. This Information is intended for use only by customers who have the requisite experience and capability to determine the correct products for their application. Any technical advice inferred from this Information or otherwise provided by us with reference to the use of our products is given gratis, and we assume no obligation or liability for the advice given or results obtained.



© 2006 - 2026 YAGEO