C1210T682F1GCC7138

SMD COTS C0G, Ceramic, 6,800 pF, 1%, 100 VDC, C0G, SMD, MLCC, COTS, Ultra-Stable, Low Loss, Class I, 1210 / 3225

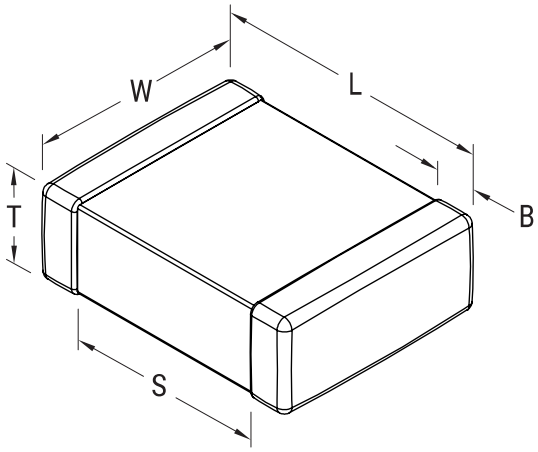

Click here for the 3D model.

General Information	
Series	SMD COTS C0G
Style	SMD Chip
Description	SMD, MLCC, COTS, Ultra-Stable, Low Loss, Class I
Features	Ultra-Stable, Low Loss, Class I
RoHS	Yes
Termination	Tin
Marking	No
Failure Rate	Testing per MIL-PRF-55681 PDA 8%, DPA per EIA-469, Humidity per MIL-STD-202, Method 103, Condition A
Typical Component Weight	40 mg
Shelf Life	78 Weeks
MSL	1

Dimensions	
L	3.2mm +/-0.2mm
W	2.5mm +/-0.2mm
T	1.25mm +/-0.15mm
S	1.5mm MIN
B	0.5mm +/-0.25mm
Case Code (EIA / mm)	1210 / 3225

Packaging Specifications	
Packaging	T&R, 330mm, Plastic Tape
Packaging Quantity	10000

Specifications	
Capacitance	6,800 pF
Measurement Condition	1 kHz 1.0Vrms
Tolerance	1%
Voltage DC	100 VDC
Dielectric Withstanding Voltage	250 VDC
Temperature Range	-55/+125°C
Temp. Coefficient	C0G
Capacitance Change with Reference to +25°C and 0 VDC Applied (TCC)	30 ppm/C, 1kHz 1.0Vrms
Dissipation Factor	0.1% 1 kHz 1.0Vrms
Aging Rate	0% Loss/Decade Hour
Insulation Resistance	100 GOhms

Statements of suitability for certain applications are based on our knowledge of typical operating conditions for such applications, but are not intended to constitute - and we specifically disclaim - any warranty concerning suitability for a specific customer application or use. This Information is intended for use only by customers who have the requisite experience and capability to determine the correct products for their application. Any technical advice inferred from this Information or otherwise provided by us with reference to the use of our products is given gratis, and we assume no obligation or liability for the advice given or results obtained.

© 2006 - 2026 YAGEO