C1210Y682K5RACTM

Aliases (C1210Y682K5RAC7025)

SMD Comm X7R FF, Ceramic, 6,800 pF, 10%, 50 VDC, X7R, SMD, MLCC, FF-CAP, Floating Electrode, 1210 / 3225

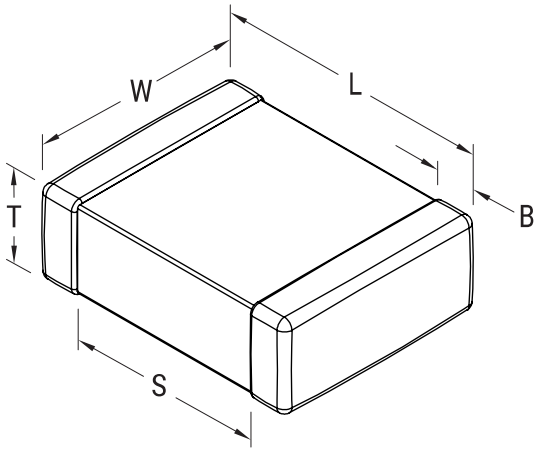

Click here for the 3D model.

General Information	
Series	SMD Comm X7R FF
Style	SMD Chip
Description	SMD, MLCC, FF-CAP, Floating Electrode
Features	FF-CAP, Floating Electrode
RoHS	Yes
Termination	Flexible Termination
Marking	Yes
Typical Component Weight	40 mg
Shelf Life	78 Weeks
MSL	1

Dimensions	
L	3.3mm +/-0.4mm
W	2.6mm +/-0.3mm
T	0.78mm +/-0.2mm
S	1.5mm MIN
B	0.6mm +/-0.25mm
Case Code (EIA / mm)	1210 / 3225

Packaging Specifications	
Packaging	T&R, 180mm, Plastic Tape
Packaging Quantity	4000

Specifications	
Capacitance	6,800 pF
Measurement Condition	1 kHz 1.0Vrms
Tolerance	10%
Voltage DC	50 VDC
Dielectric Withstanding Voltage	125 VDC
Temperature Range	-55/+125°C
Temp. Coefficient	X7R
Capacitance Change with Reference to +25°C and 0 VDC Applied (TCC)	15%
Dissipation Factor	2.5% 1 kHz 1.0Vrms
Aging Rate	3% Loss/Decade Hour: Referee Time is 1000 Hours
Insulation Resistance	100 GOhms

Statements of suitability for certain applications are based on our knowledge of typical operating conditions for such applications, but are not intended to constitute - and we specifically disclaim - any warranty concerning suitability for a specific customer application or use. This Information is intended for use only by customers who have the requisite experience and capability to determine the correct products for their application. Any technical advice inferred from this Information or otherwise provided by us with reference to the use of our products is given gratis, and we assume no obligation or liability for the advice given or results obtained.

© 2006 - 2026 YAGEO