CC0603FRNPO8BN331

Please contact sales for availability

CC NPO, Ceramic, 330 pF, 1%, 25 VDC, C0G, SMD, MLCC, 0603 / 1608

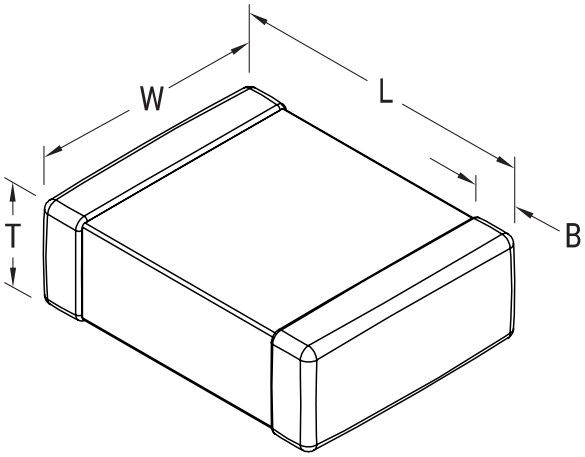

General Information	
Series	CC NPO
Style	SMD Chip
Description	SMD, MLCC
Features	Temperature Stable
RoHS	Yes
Termination	Tin
MSL	1

Dimensions	
L	1.6mm +/-0.1mm
W	0.8mm +/-0.1mm
T	0.8mm +/-0.1mm
B	0.35mm +/-0.15mm
Case Code (EIA / mm)	0603 / 1608

Packaging Specifications	
Packaging	T&R, 178mm, Paper Tape
Packaging Quantity	4000

Specifications	
Capacitance	330 pF
Tolerance	1%
Voltage DC	25 VDC
Temperature Range	-55/+125°C
Temp. Coefficient	C0G
Dissipation Factor	0.1%
Insulation Resistance	10 GOhms
Endurance (% Rated voltage)	200%

Statements of suitability for certain applications are based on our knowledge of typical operating conditions for such applications, but are not intended to constitute - and we specifically disclaim - any warranty concerning suitability for a specific customer application or use. This Information is intended for use only by customers who have the requisite experience and capability to determine the correct products for their application. Any technical advice inferred from this Information or otherwise provided by us with reference to the use of our products is given gratis, and we assume no obligation or liability for the advice given or results obtained.

© 2006 - 2026 YAGEO