CC0805ZKY5V6BB475

CC Y5V, Ceramic, 4.7 uF, -20/+80%, 10 VDC, Y5V, 0805 / 2012

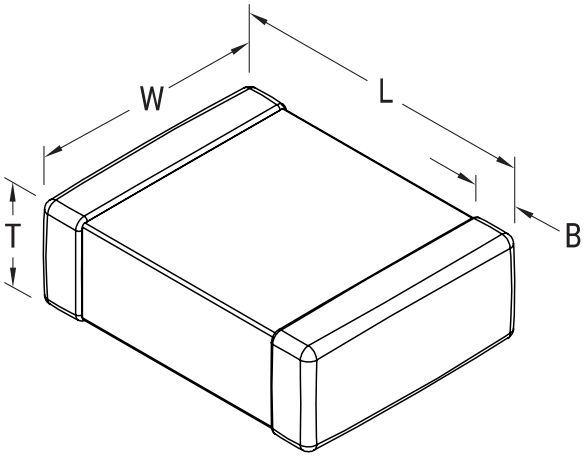

Click here for the 3D model.

General Information	
Series	CC Y5V
Style	SMD Chip
RoHS	Yes
Termination	Tin

Dimensions	
L	2mm +/-0.2mm
W	1.25mm +/-0.20mm
T	0.85mm +/-0.1mm
B	0.5mm +/-0.25mm
Case Code (EIA / mm)	0805 / 2012

Packaging Specifications	
Packaging	T&R, 178mm, Plastic Tape
Packaging Quantity	3000

Specifications	
Capacitance	4.7 uF
Tolerance	-20/+80%
Voltage DC	10 VDC
Temperature Range	-30/+85°C
Temp. Coefficient	Y5V
Dissipation Factor	12.5%
Insulation Resistance	106.38 MOhms

Statements of suitability for certain applications are based on our knowledge of typical operating conditions for such applications, but are not intended to constitute - and we specifically disclaim - any warranty concerning suitability for a specific customer application or use. This Information is intended for use only by customers who have the requisite experience and capability to determine the correct products for their application. Any technical advice inferred from this Information or otherwise provided by us with reference to the use of our products is given gratis, and we assume no obligation or liability for the advice given or results obtained.

© 2006 - 2026 YAGEO