CC1206MRY5V9BB474

CC Y5V, Ceramic, 0.47 uF, 20%, 50 VDC, Y5V, SMD, MLCC, High Voltage, 1206 / 3216

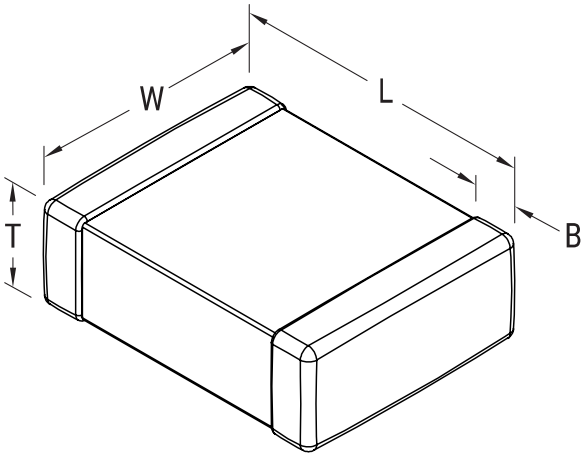

Click here for the 3D model.

General Information	
Series	CC Y5V
Style	SMD Chip
Description	SMD, MLCC, High Voltage
RoHS	Yes
Termination	Tin
Halogen Free	Yes
MSL	1

Dimensions	
L	3.2mm +/-0.3mm
W	1.6mm +/-0.15mm
T	0.85mm +/-0.1mm
B	0.5mm +/-0.25mm
Case Code (EIA / mm)	1206 / 3216

Packaging Specifications	
Packaging	T&R, 178mm
Packaging Quantity	2500

Specifications	
Capacitance	0.47 uF
Tolerance	20%
Voltage DC	50 VDC
Temperature Range	-55/+125°C
Temp. Coefficient	Y5V
Dissipation Factor	9%
Insulation Resistance	10 GOhms

Statements of suitability for certain applications are based on our knowledge of typical operating conditions for such applications, but are not intended to constitute - and we specifically disclaim - any warranty concerning suitability for a specific customer application or use. This Information is intended for use only by customers who have the requisite experience and capability to determine the correct products for their application. Any technical advice inferred from this Information or otherwise provided by us with reference to the use of our products is given gratis, and we assume no obligation or liability for the advice given or results obtained.

© 2006 - 2026 YAGEO