CC1210KKX5R8BB225

Please contact sales for availability

CC X5R, Ceramic, 2.2 uF, 10%, 25 VDC, X5R, 1210 / 3225

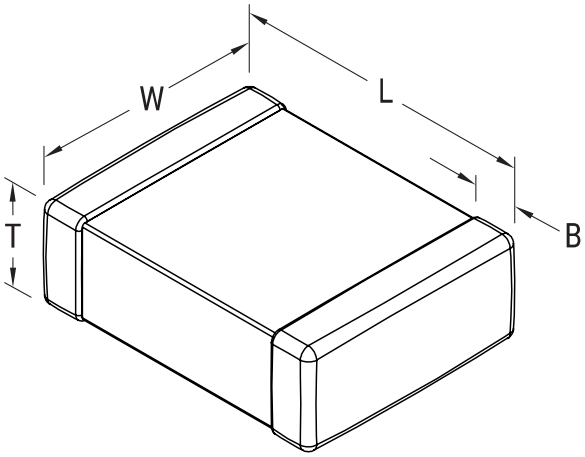

Click here for the 3D model.

General Information	
Series	CC X5R
Style	SMD Chip
RoHS	Yes
Termination	Tin

Dimensions	
L	3.2mm +/-0.4mm
W	2.5mm +/-0.3mm
T	1.9mm +/-0.2mm
B	0.5mm +/-0.25mm
Case Code (EIA / mm)	1210 / 3225

Packaging Specifications	
Packaging	T&R, 178mm, Plastic Tape
Packaging Quantity	2000

Specifications	
Capacitance	2.2 uF
Tolerance	10%
Voltage DC	25 VDC
Temperature Range	-55/+85°C
Temp. Coefficient	X5R
Dissipation Factor	3.5%
Insulation Resistance	227 MOhms
Endurance (% Rated voltage)	200%

Statements of suitability for certain applications are based on our knowledge of typical operating conditions for such applications, but are not intended to constitute - and we specifically disclaim - any warranty concerning suitability for a specific customer application or use. This Information is intended for use only by customers who have the requisite experience and capability to determine the correct products for their application. Any technical advice inferred from this Information or otherwise provided by us with reference to the use of our products is given gratis, and we assume no obligation or liability for the advice given or results obtained.

© 2006 - 2026 YAGEO