CS1206MRX7R7BB682

CS, Ceramic, 6,800 pF, 20%, 16 VDC, X7R, 1206 / 3216

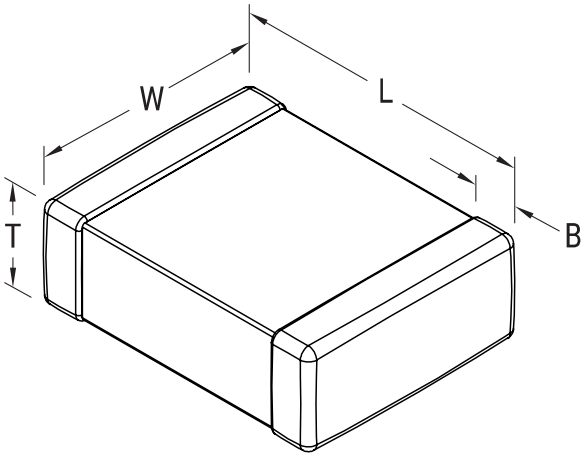

Click here for the 3D model.

General Information	
Series	CS
Style	SMD Chip
Features	Class II
RoHS	Yes
Termination	Flexible Termination

Dimensions	
L	3.2mm +/-0.4mm
W	1.6mm +/-0.2mm
T	0.85mm +/-0.15mm
B	0.55mm +/-0.3mm
Case Code (EIA / mm)	1206 / 3216

Packaging Specifications	
Packaging	T&R, 178mm, Paper Tape
Packaging Quantity	4000

Specifications	
Capacitance	6,800 pF
Tolerance	20%
Voltage DC	16 VDC
Temperature Range	-55/+125°C
Temp. Coefficient	X7R
Dissipation Factor	3.5%
Insulation Resistance	10 GOhms

Statements of suitability for certain applications are based on our knowledge of typical operating conditions for such applications, but are not intended to constitute - and we specifically disclaim - any warranty concerning suitability for a specific customer application or use. This Information is intended for use only by customers who have the requisite experience and capability to determine the correct products for their application. Any technical advice inferred from this Information or otherwise provided by us with reference to the use of our products is given gratis, and we assume no obligation or liability for the advice given or results obtained.

© 2006 - 2026 YAGEO