KO-CAP Polymer Capacitors

Overview

The T543 Series is a KEMET solution for designers seeking for cost effective solutions up-screened to HRA equivalents. T543's up screened options includes surge current testing of 10 cycles at +25°C and 10 cycles at -55°C/+85°C. In addition to 100% Tin (Sn) termination, a tin-lead (SnPb) option is also available. The recommended application derating for these capacitors is 10 – 20%, rendering them suitable for application voltages from 2.25 to 50 VDC. In order to support customers' requirements KEMET develop and implement new up-screen test protocols.

Benefits

- Extremely low ESR
- High frequency capacitance retention
- 100% accelerated steady state aging
- 100% surge current tested
- Tape & Reel standard packaging per EIA 481
- Volumetrically efficienct
- Surge options at 25°C and −55°C/+85°C
- EIA standard case sizes
- Halogen-free epoxy and RoHS compliant

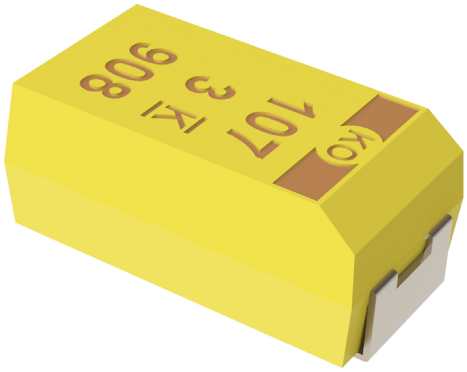

Applications

Typical applications include DC/DC converters, switch mode and point of load power supply, radar pulse capacitor, and telecommunications (mobile phone and base station). Other general applications include decoupling and filtering in applications requiring low ESR or a benign failure mode.

When extreme temperatures and humidity are taken into account, polymer tantalum capacitors offer a number of advantages over other types of capacitors, when used in extreme environments. KEMET continues to investigate the behavior of polymer tantalum capacitors in extreme conditions. If you have questions about using these capacitors in a specific environment or application, we suggest you contact your local representative or field application engineer to discuss the specific details of your application (see "Considerations for Polymer Capacitors in Extreme Environments" located at www.kemet.com/ExtremePolymerPaper).

Environmental Compliance

RoHS compliant when ordered with 100% Sn solder.
- Halogen-free
- Epoxy compliant with UL94 V–0
- Molded Epoxy complies for outgassing testing under ASTM E 595.

K-SIM

For a detailed analysis of specific part numbers, please visit https://ksim3.kemet.com/capacitor-simulation to access KEMET's K-SIM software. KEMET K-SIM is designed to simulate behavior of components with respect to frequency, ambient temperature, and DC bias levels.

Ordering Information

T	543	D	156	K	035	A	H	E	100	
Capacitor Class	Series	Case Size	Capacitance Code (pF)	Capacitance Tolerance	Rated Voltage (VDC)	Failure Rate/ Design	Termination Finish	Added Surge Current Options	ESR	Packaging (C-Spec)
T = Tantalum	Polymer Tantalum HRA	A,B, C, D, H, L, M, O, T, U, V, W, X, Y	First two digits represent significant figures. Third digit specifies number of zeros.	K = ±10% M = ±20%	2R5 = 2.5 003 = 3 004 = 4 006 = 6.3 008 = 8 010 = 10 12R = 12.5 016 = 16 020 = 20 025 = 25 030 = 30 035 = 35 040 = 40 050 = 50 063 = 63	A = N/A	H = Standard solder coated (SnPb 5% Pb minimum) T = 100% tin (Sn)	E = No additional surge current testing S = 10 cycles 25°C ±5°C W = 10 cycles −55°C ±5°C and 85°C ±5°C	ESR in mΩ	Blank = 7" reel 7280 = 13" reel 7610 = Bulk Bag 7640 = Bulk plastic box WAFL = Waffle pack

Performance Characteristics

Item	Performance Characteristics
Operating Temperature	−55°C to 105°C/125°C (refer to part number for maximum temperature rating)
Rated Capacitance Range	4.7 – 2,000 µF at 120 Hz/25°C
Capacitance Tolerance	K tolerance (10%), M tolerance (20%)
Rated Voltage Range	2.5 – 63 V
DF (120 Hz)	Refer to Part Number Electrical Specification Table
ESR (100 kHz)	Refer to Part Number Electrical Specification Table
Leakage Current	≤ 0.1 CV (µA) at rated voltage after 5 minutes

Qualification

Test	Condition	Characteristics			
Endurance	105°C at rated voltage, 2,000 hours 125°C at 2/3 rated voltage, 2,000 hours**	Δ C/C	Within −20/+10 of initial value		
		DF	Within initial limits		
		DCL	Within 1.25 x initial limit		
		ESR	Within 2.0 x initial limit		
Storage Life	105°C at 0 volts, 2,000 hours 125°C at 0 volts, 2,000 hours**	Δ C/C	Within −20/+10 of initial value		
		DF	Within initial limits		
		DCL	Within 1.25 x initial limit		
		ESR	Within 2.0 x initial limit		
Humidity	60°C, 90% RH, 500 hours	Δ C/C	Within −5%/+35% of initial value		
		DF	Within initial limits		
		DCL	Within 5.0 x initial limit		
		ESR	Within 2.0 x initial limit		
Temperature Stability	Extreme temperature exposure at a succession of continuous steps at +25°C, −55°C, +25°C, +85°C, +105°C/+125°C**, +25° C		+25°C	−55°C	+85°C	+105°C /+125°C
		Δ C/C	IL*	±20%	±20%	±30%
		DF	IL	IL	1.2 x IL	1.5 x IL
		DCL	IL	N/A	10 x IL	10 x IL
Surge Voltage	105°C, 1.32 x rated voltage, 1,000 cycles	Δ C/C	Within −20/+10 of initial value		
		DF	Within initial limits		
		DCL	Within initial limits		
		ESR	Within initial limits		
Mechanical Shock/ Vibration	MIL–STD–202, Method 213, Condition I, 100 G peak MIL–STD–202, Method 204, Condition D, 10 Hz to 2,000 Hz, 20 G peak	Δ C/C	Within ±10 of initial value		
		DF	Within initial limits		
		DCL	Within initial limits		

**IL = Initial limit*
***Refer to part number specifications for individual temperature classification*
**1 For PN T543X476M050 test voltage is 1.2 x Vr*

Reliability

KO-CAP capacitors have an average failure rate of 0.5 %/1,000 hours at category voltage, U_C, and category temperature, T_C. These capacitors are qualified using industry test standards at U_C and T_C. The minimum test time (1,000 hours or 2,000 hours) is dependent on the product.

The actual life expectancy of KO-CAP capacitors increases when application voltage, U_A, and application temperature, T_A, are lower than U_C and T_C. As a general guideline, when $U_A < 0.9 * U_C$ and $T_A < 85°C$, the life expectancy will typically exceed the useful lifetime of most hardware (> 10 years).

The lifetime of a KO-CAP capacitor at a specific application voltage and temperature can be modeled using the equations below. A failure is defined as passing enough current to blow a 1-amp fuse. The calculation is an estimation based on empirical results and is not a guarantee.

$$VAF = \left(\frac{U_C}{U_A}\right)^n$$

where:
VAF = acceleration factor due to voltage, unitless
U_C = category voltage, volt
U_A = application voltage, volt
n = exponent, 16

$$TAF = e^{\left[\frac{E_a}{k}\left(\frac{1}{273+T_A} - \frac{1}{273+T_C}\right)\right]}$$

where:
TAF = acceleration factor due to temperature, unitless
E_a = activation energy, 1.4 eV
k = Boltzmann's constant, 8.617E-5 eV/K
T_A = application temperature, °C
T_C = category temperature, °C

$$AF = VAF * TAF$$

where:
AF = acceleration factor, unitless
TAF = accerlation factor due to temperature, unitless
VAF = acceleration factor due to voltage, unitless

$$Life_{U_A,T_A} = Life_{U_C,T_C} * AF$$

where:
$Life_{UA, TA}$ = estimated life application voltage and temperature, years
$Life_{UC, TC}$ = guaranteed life category voltage and temperature, years
AF = acceleration factor, unitless

Terms:
Category voltage, U_C : maximum recommended peak DC operating voltage for continuous operation at the category temperature, T_C
Rated voltage, U_R : maximum recommended peak DC operating voltage for continuous operation up to the rated temperature, T_R
Category temperature, T_C : maximum recommended operating temperature. Voltage derating may be required at T_C
Rated temperature, T_R : maximum recommended operating temperature without voltage derating. T_R is equal to or lower than T_C

Reliability Table 1 – Common temperature range classifications

85°C (T_R) / 85°C (T_C)	Rated Voltage (U_R)	2.5	4.0	6.3	8.0	10.0	12.5	16.0	20.0	25.0	35.0	50.0	63.0	75.0
	Category Voltage (U_C)	2.5	4.0	6.3	8.0	10.0	12.5	16.0	20.0	25.0	35.0	50.0	63.0	75.0
105°C (T_R) / 105°C (T_C)	Rated Voltage (U_R)	2.5	4.0	6.3	8.0	10.0	12.5	16.0	20.0	25.0	35.0	50.0	63.0	75.0
	Category Voltage (U_C)	2.5	4.0	6.3	8.0	10.0	12.5	16.0	20.0	25.0	35.0	50.0	63.0	75.0
105°C (T_R) / 125°C (T_C)	Rated Voltage (U_R)	2.5	4.0	6.3	8.0	10.0	12.5	16.0	20.0	25.0	35.0	50.0	63.0	75.0
	Category Voltage (U_C)	1.7	2.7	4.2	5.4	6.7	8.4	10.7	13.4	16.8	23.5	33.5	42.2	50.3

Electrical Characteristics

ESR vs. Frequency

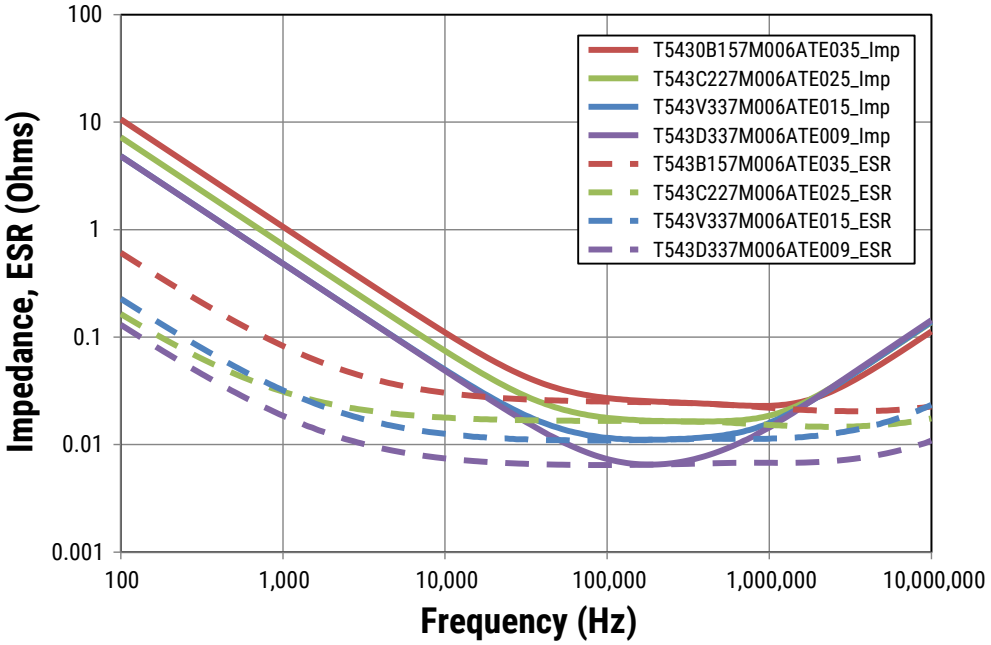

Capacitance vs. Frequency

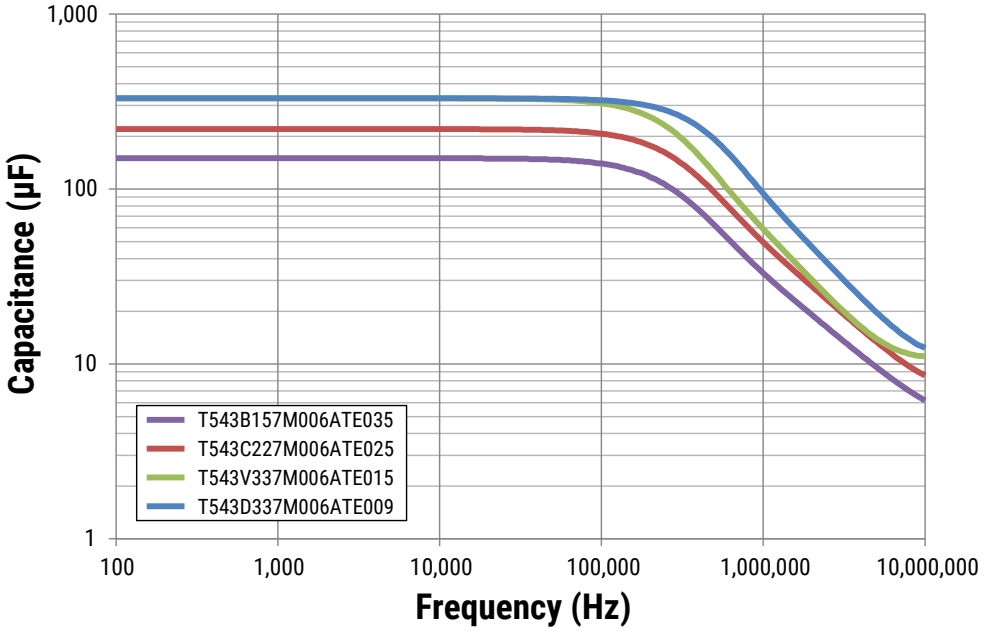

Dimensions – Millimeters

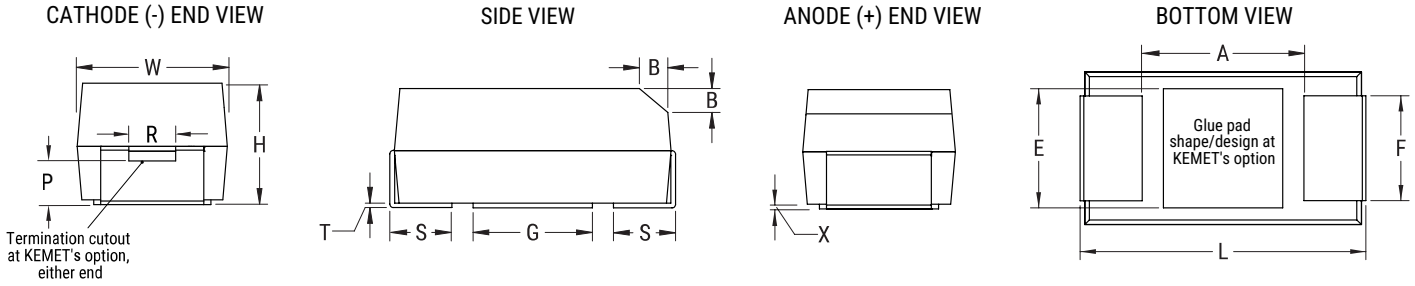

Case Size		Component Dimensions													Typical Weight
KEMET	EIA	L	W	H	F ±0.1 ±(0.004)	S ±0.3 ±(0.012)	B ±0.15 (Ref) ±0.006	X (Ref)	P (Ref)	R (Ref)	T (Ref)	A (Min)	G (Ref)	E (Ref)	(mg)
A	3216–18	3.2±0.2 (0.126±0.008)	1.6±0.2 (0.063 ±0.008)	1.6±0.2 (0.063±0.008)	1.2 (0.047)	0.8 (0.031)	0.4 (0.016)	0.10±0.10 (0.004±0.004)	0.4 (0.016)	0.4 (0.016)	0.13 (0.005)	1.2 (0.047)	1.1 (0.043)	1.3 (0.051)	53.17
B	3528–21	3.5±0.2 (0.138±0.008)	2.8±0.2 (0.110±0.008)	1.9±0.2 (0.075±0.008)	2.2 (0.087)	0.8 (0.031)	0.4 (0.016)	0.10±0.10 (0.004±0.004)	0.5 (0.020)	1.0 (0.039)	0.13 (0.005)	1.9 (0.075)	1.8 (0.071)	2.2 (0.087)	98.30
C	6032–28	6.0±0.3 (0.236±0.012)	3.2±0.2 (0.126±0.008)	2.5±0.3 (0.098±0.012)	2.2 (0.087)	1.3 (0.051)	0.5 (0.020)	0.10±0.10 (0.004±0.004)	0.9 (0.035)	1.0 (0.039)	0.13 (0.005)	3.1 (0.122)	2.8 (0.110)	2.4 (0.094)	193.46
D	7343–31	7.3±0.3 (0.287±0.012)	4.3±0.3 (0.169±0.012)	2.8±0.3 (0.110±0.012)	2.4 (0.094)	1.3 (0.051)	0.5 (0.020)	0.10±0.10 (0.004±0.004)	0.9 (0.035)	1.0 (0.039)	0.13 (0.005)	3.8 (0.150)	3.5 (0.138)	3.5 (0.138)	352.36
H	7360–20	7.3±0.3 (0.287±0.012)	6.0±0.3 (0.236±0.012)	1.9±0.1 (0.075±0.004)	4.1 (0.161)	1.3 (0.051)	N/A	0.10±0.10 (0.004±0.004)	N/A	N/A	0.13 (0.005)	3.8 (0.150)	3.5 (0.138)	3.5 (0.138)	366.62
L	6032–19	6.0±0.3 (0.236±0.012)	3.2±0.2 (0.110±0.008)	1.8±0.1 (0.071±0.004)	2.2 (0.087)	1.3 (0.051)	N/A	0.05 (0.002)	N/A	N/A	0.13 (0.005)	3.1 (0.122)	2.8 (0.110)	2.4 (0.094)	No data
M	3528–15	3.5±0.2 (0.138±0.008)	2.8±0.2 (0.110±0.008)	1.4±0.1 (0.055±0.004)	2.2 (0.087)	0.8 (0.031)	N/A	0.05 (0.002)	N/A	N/A	0.13 (0.005)	1.9 (0.075)	1.8 (0.071)	2.2 (0.087)	97.99
O	7360-43	7.3±0.3 (0.287±0.012)	6.0±0.3 (0.236±0.012)	4.0±0.3 (0.157±0.012)	4.1 (0.161)	1.3 (0.051)	N/A	0.10 ±0.10 (0.004±0.004)	N/A	N/A	0.13 (0.005)	3.8 (0.150)	3.5 (0.138)	3.5 (0.138)	696.00
T	3528–12	3.5±0.2 (0.138±0.008)	2.8±0.2 (0.110±0.008)	1.1±0.1 (0.043±0.004)	2.2 (0.087)	0.8 (0.031)	N/A	0.05 (0.002)	N/A	N/A	0.13 (0.005)	1.9 (0.075)	1.8 (0.071)	2.2 (0.087)	59.38
U	6032–15	6.0±0.3 (0.236±0.012)	3.2±0.2 (0.110±0.008)	1.4±0.1 (0.055±0.004)	2.2 (0.087)	1.3 (0.051)	N/A	0.05 (0.002)	N/A	N/A	0.13 (0.005)	3.1 (0.122)	2.8 (0.110)	2.4 (0.094)	No data
V	7343–20	7.3±0.3 (0.287±0.012)	4.3±0.3 (0.169±0.012)	1.9±0.1 (0.075±0.004)	2.4 (0.094)	1.3 (0.051)	N/A	0.05 (0.002)	N/A	N/A	0.13 (0.005)	3.8 (0.150)	3.5 (0.138)	3.5 (0.138)	262.90
W	7343–15	7.3±0.3 (0.287±0.012)	4.3±0.3 (0.169±0.012)	1.4±0.1 (0.055 ±0.004)	2.4 (0.094)	1.3 (0.051)	N/A	0.05 (0.002)	N/A	N/A	0.13 (0.005)	3.8 (0.150)	3.5 (0.138)	3.5 (0.138)	222.94
X	7343–43	7.3±0.3 (0.287±0.012)	4.3±0.3 (0.169±0.012)	4.0±0.3 (0.157±0.012)	2.4 (0.094)	1.3 (0.051)	0.5 (0.020)	0.10±0.10 (0.004±0.004)	1.7 (0.067)	1.0 (0.039)	0.13 (0.005)	3.8 (0.150)	3.5 (0.138)	3.5 (0.138)	588.16
Y	7343–40	7.3±0.3 (0.287±0.012)	4.3±0.3 (0.169±0.012)	3.8±0.2 (0.150±0.008)	2.4 (0.094)	1.3 (0.051)	0.5 (0.020)	0.10±0.10 (0.004±0.004)	1.7 (0.067)	1.0 (0.039)	0.13 (0.005)	3.8 (0.150)	3.5 (0.138)	3.5 (0.138)	481.55

Notes: (Ref) – Dimensions provided for reference only. For low profile cases, no dimensions are provided for B, P, or R because these cases do not have a bevel or a notch.
These weights are provided as reference. If exact weights are needed, please contact your KEMET Sales Representative.

Table 1 – Ratings & Part Number Reference

Rated Voltage VDC at 105°C	Rated Cap	Case Code/ Case Size	KEMET Part Number	DC Leakage	DF	ESR	Maximum Allowable Ripple Current	Maximum Operating Temp.	MSL
Not all parts are 105°C rated	µF	KEMET/EIA	(See below for part options)	µA at V_R, 25°C Maximum/ 5 Minutes	% at 25°C 120 Hz Maximum	mΩ at 25°C 100 kHz Maximum	(rms) mA at 45°C 100 kHz	°C	Reflow Temp ≤ 260°C
2.5	47	A/3216-18	T543A476(1)2R5A(2)(3)090	12	8	90	1,116	105	3
2.5	56	T/3528-12	T543T566(1)2R5A(2)(3)040	14	8	40	1,620	105	3
2.5	56	T/3528-12	T543T566(1)2R5A(2)(3)070	14	8	70	1,225	105	3
2.5	68	A/3216-18	T543A686(1)2R5A(2)(3)070	17	8	70	1,265	105	3
2.5	68	A/3216-18	T543A686(1)2R5A(2)(3)080	17	8	80	1,183	105	3
2.5	100	T/3528-12	T543T107(1)2R5A(2)(3)040	25	8	40	1,620	105	3
2.5	100	T/3528-12	T543T107(1)2R5A(2)(3)070	25	8	70	1,225	105	3
2.5	100	T/3528-12	T543T107(1)2R5A(2)(3)080	25	8	80	1,146	105	3
2.5	100	B/3528-21	T543B107(1)2R5A(2)(3)025	25	8	25	2,254	105	3
2.5	100	B/3528-21	T543B107(1)2R5A(2)(3)035	25	8	35	1,905	105	3
2.5	100	B/3528-21	T543B107(1)2R5A(2)(3)040	25	8	40	1,782	105	3
2.5	100	B/3528-21	T543B107(1)2R5A(2)(3)070	25	8	70	1,347	105	3
2.5	150	U/6032-15	T543U157(1)2R5A(2)(3)055	38	8	55	1,567	105	3
2.5	220	B/3528-21	T543B227(1)2R5A(2)(3)025	55	8	25	2,254	105	3
2.5	220	B/3528-21	T543B227(1)2R5A(2)(3)030	55	8	30	2,058	105	3
2.5	220	B/3528-21	T543B227(1)2R5A(2)(3)035	55	8	35	1,905	105	3
2.5	220	B/3528-21	T543B227(1)2R5A(2)(3)055	55	8	55	1,520	105	3
2.5	220	B/3528-21	T543B227(1)2R5A(2)(3)070	55	8	70	1,347	105	3
2.5	220	U/6032-15	T543U227(1)2R5A(2)(3)055	55	8	55	1,567	105	3
2.5	220	C/6032-28	T543C227(1)2R5A(2)(3)025	55	8	25	2,569	105	3
2.5	220	C/6032-28	T543C227(1)2R5A(2)(3)045	55	8	45	1,915	105	3
2.5	220	W/7343-15	T543W227(1)2R5A(2)(3)025	55	10	25	2,683	105	3
2.5	220	V/7343-20	T543V227(1)2R5A(2)(3)015	55	10	15	3,531	105	3
2.5	220	V/7343-20	T543V227(1)2R5A(2)(3)025	55	10	25	2,735	105	3
2.5	220	V/7343-20	T543V227(1)2R5A(2)(3)045	55	10	45	2,039	105	3
2.5	220	D-7343-31	T543D227(1)2R5A(2)(3)040	55	10	40	2,372	105	3
2.5	330	B/3528-21	T543B337(1)2R5A(2)(3)035	83	8	35	1,905	105	3
2.5	330	B/3528-21	T543B337(1)2R5A(2)(3)045	83	8	45	1,680	105	3
2.5	330	B/3528-21	T543B337(1)2R5A(2)(3)070	83	8	70	1,347	105	3
2.5	330	L/6032-19	T543L337(1)2R5A(2)(3)012	83	8	12	3,536	105	3
2.5	330	L/6032-19	T543L337(1)2R5A(2)(3)025	83	8	25	2,449	105	3
2.5	330	C/6032-28	T543C337(1)2R5A(2)(3)015	83	8	15	3,317	105	3
2.5	330	C/6032-28	T543C337(1)2R5A(2)(3)018	83	8	18	3,028	105	3
2.5	330	C/6032-28	T543C337(1)2R5A(2)(3)025	83	8	25	2,569	105	3
2.5	330	C/6032-28	T543C337(1)2R5A(2)(3)045	83	8	45	1,915	105	3
2.5	330	W/7343-15	T543W337(1)2R5A(2)(3)015	83	10	15	3,464	105	3
2.5	330	W/7343-15	T543W337(1)2R5A(2)(3)025	83	10	25	2,683	105	3
2.5	330	W/7343-15	T543W337(1)2R5A(2)(3)040	83	10	40	2,121	105	3
2.5	330	V/7343-20	T543V337(1)2R5A(2)(3)015	83	10	15	3,531	105	3
2.5	330	V/7343-20	T543V337(1)2R5A(2)(3)018	83	10	18	3,223	105	3
2.5	330	V/7343-20	T543V337(1)2R5A(2)(3)025	83	10	25	2,735	105	3
2.5	330	V/7343-20	T543V337(1)2R5A(2)(3)040	83	10	40	2,162	105	3
2.5	330	D-7343-31	T543D337(1)2R5A(2)(3)006	83	10	6	6,124	105	3
2.5	330	D-7343-31	T543D337(1)2R5A(2)(3)007	83	10	7	5,669	105	3
2.5	330	D-7343-31	T543D337(1)2R5A(2)(3)025	83	10	25	3,000	105	3
2.5	470	C/6032-28	T543C477(1)2R5A(2)(3)025	118	8	25	2,569	105	3
2.5	470	C/6032-28	T543C477(1)2R5A(2)(3)045	118	8	45	1,915	105	3
2.5	470	V/7343-20	T543V477(1)2R5A(2)(3)018	118	10	18	3,223	105	3
2.5	470	D-7343-31	T543D477(1)2R5A(2)(3)005	118	10	5	6,708	105	3
2.5	470	D-7343-31	T543D477(1)2R5A(2)(3)006	118	10	6	6,124	105	3
VDC at 105°C	µF	KEMET/EIA	(See below for part options)	µA at V_R, 25°C Maximum/ 5 Minutes	% at 25°C 120 Hz Maximum	mΩ at 25°C 100 kHz Maximum	(rms) mA at 45°C 100 kHz	°C	Reflow Temp ≤ 260°C
Rated Voltage	Rated Capacitance	Case Code/ Case Size	KEMET Part Number	DC Leakage	DF	ESR	Maximum Allowable Ripple Current	Maximum Operating Temp.	MSL

(1) To complete KEMET part number, insert M for ±20%, K for ±10%. Designates capacitance tolerance.
(2) To complete KEMET part number, H = Solder-plated, T = 100% Tin (Sn). Designates termination finish.
(3) To complete KEMET part number, insert E = None, S = 10 cycles +25°C, W = 10 cycles −55°C +85°C. Designates surge current option.
Refer to Ordering Information for additional detail.
Part Numbers marked in blue font are "Under Development." Engineering samples available upon request.

Table 1 – Ratings & Part Number Reference cont.

Rated Voltage VDC at 105°C	Rated Cap	Case Code/ Case Size	KEMET Part Number	DC Leakage	DF	ESR	Maximum Allowable Ripple Current	Maximum Operating Temp.	MSL
Not all parts are 105°C rated	µF	KEMET/EIA	(See below for part options)	µA at V_R, 25°C Maximum/ 5 Minutes	% at 25°C 120 Hz Maximum	mΩ at 25°C 100 kHz Maximum	(rms) mA at 45°C 100 kHz	°C	Reflow Temp ≤ 260°C
2.5	470	D-7343-31	T543D477(1)2R5A(2)(3)007	118	10	7	5,669	105	3
2.5	470	D-7343-31	T543D477(1)2R5A(2)(3)009	118	10	9	5,000	105	3
2.5	470	D-7343-31	T543D477(1)2R5A(2)(3)010	118	10	10	4,743	105	3
2.5	470	D-7343-31	T543D477(1)2R5A(2)(3)025	118	10	25	3,000	105	3
2.5	560	D-7343-31	T543D567(1)2R5A(2)(3)005	140	10	5	6,708	105	3
2.5	680	D-7343-31	T543D687(1)2R5A(2)(3)006	170	10	6	6,124	125	3
2.5	680	D-7343-31	T543D687(1)2R5A(2)(3)010	170	10	10	4,743	125	3
2.5	680	D-7343-31	T543D687(1)2R5A(2)(3)015	170	10	15	3,873	125	3
2.5	680	D-7343-31	T543D687(1)2R5A(2)(3)040	170	10	40	2,372	125	3
2.5	680	Y/7343-40	T543Y687(1)2R5A(2)(3)005	170	10	5	6,943	105	3
2.5	680	Y/7343-40	T543Y687(1)2R5A(2)(3)006	170	10	6	6,338	105	3
2.5	680	Y/7343-40	T543Y687(1)2R5A(2)(3)010	170	10	10	4,909	105	3
2.5	680	Y/7343-40	T543Y687(1)2R5A(2)(3)015	170	10	15	4,008	105	3
2.5	680	Y/7343-40	T543Y687(1)2R5A(2)(3)025	170	10	25	3,105	105	3
2.5	680	X/7343-43	T543X687(1)2R5A(2)(3)006	170	10	6	6,416	105	3
2.5	1,000	Y/7343-40	T543Y108(1)2R5A(2)(3)005	250	10	5	6,943	105	3
2.5	1,000	Y/7343-40	T543Y108(1)2R5A(2)(3)006	250	10	6	6,338	105	3
2.5	1,000	Y/7343-40	T543Y108(1)2R5A(2)(3)010	250	10	10	4,909	105	3
2.5	1,000	Y/7343-40	T543Y108(1)2R5A(2)(3)015	250	10	15	4,008	105	3
2.5	1,000	Y/7343-40	T543Y108(1)2R5A(2)(3)025	250	10	25	3,105	105	3
2.5	1,000	X/7343-43	T543X108(1)2R5A(2)(3)005	250	10	5	7,029	105	3
2.5	1,000	X/7343-43	T543X108(1)2R5A(2)(3)006	250	10	6	6,416	105	3
2.5	1,000	X/7343-43	T543X108(1)2R5A(2)(3)010	250	10	10	4,970	105	3
2.5	1,500	X/7343-43	T543X158(1)2R5A(2)(3)005	375	10	5	7,029	105	3
2.5	1,500	X/7343-43	T543X158(1)2R5A(2)(3)010	375	10	10	4,970	105	3
3	100	B/3528-21	T543B107(1)003A(2)(3)035	30	8	35	1,905	105	3
3	100	B/3528-21	T543B107(1)003A(2)(3)040	30	8	40	1,782	105	3
3	100	B/3528-21	T543B107(1)003A(2)(3)070	30	8	70	1,347	105	3
3	100	B/3528-21	T543B107(1)003A(2)(3)080	30	8	80	1,260	105	3
3	150	B/3528-21	T543B157(1)003A(2)(3)035	45	8	35	1,905	105	3
3	150	B/3528-21	T543B157(1)003A(2)(3)040	45	8	40	1,782	105	3
3	150	B/3528-21	T543B157(1)003A(2)(3)070	45	8	70	1,347	105	3
3	150	B/3528-21	T543B157(1)003A(2)(3)080	45	8	80	1,260	105	3
3	330	V/7343-20	T543V337(1)003A(2)(3)015	99	10	15	3,531	105	3
3	330	V/7343-20	T543V337(1)003A(2)(3)025	99	10	25	2,735	105	3
3	330	D-7343-31	T543D337(1)003A(2)(3)025	99	10	25	3,000	105	3
3	470	D-7343-31	T543D477(1)003A(2)(3)010	141	10	10	4,743	105	3
3	470	D-7343-31	T543D477(1)003A(2)(3)025	141	10	25	3,000	105	3
3	680	D-7343-31	T543D687(1)003A(2)(3)010	204	10	10	4,743	125	3
3	680	D-7343-31	T543D687(1)003A(2)(3)015	204	10	15	3,873	125	3
3	680	D-7343-31	T543D687(1)003A(2)(3)025	204	10	25	3,000	125	3
3	680	D-7343-31	T543D687(1)003A(2)(3)040	204	10	40	2,372	125	3
3	1,000	X/7343-43	T543X108(1)003A(2)(3)010	300	10	10	4,970	105	3
3	1,000	X/7343-43	T543X108(1)003A(2)(3)015	300	10	15	4,058	105	3
3	1,000	X/7343-43	T543X108(1)003A(2)(3)030	300	10	30	2,869	105	3
3	1,500	X/7343-43	T543X158(1)003A(2)(3)008	450	10	8	5,557	125	3
3	2,000	O/7360-43	T543O208M003A(2)(3)010	600	10	10	5,480	105	3
4	15	T/3528-12	T543T156(1)004A(2)(3)100	6	8	100	1,025	105	3
4	33	A/3216-18	T543A336(1)004A(2)(3)070	13	8	70	1,265	105	3
4	33	A/3216-18	T543A336(1)004A(2)(3)080	13	8	80	1,183	105	3
VDC at 105°C	µF	KEMET/EIA	(See below for part options)	µA at V_R, 25°C Maximum/ 5 Minutes	% at 25°C 120 Hz Maximum	mΩ at 25°C 100 kHz Maximum	(rms) mA at 45°C 100 kHz	°C	Reflow Temp ≤ 260°C
Rated Voltage	Rated Capacitance	Case Code/ Case Size	KEMET Part Number	DC Leakage	DF	ESR	Maximum Allowable Ripple Current	Maximum Operating Temp.	MSL

(1) To complete KEMET part number, insert M for ±20%, K for ±10%. Designates capacitance tolerance.
(2) To complete KEMET part number, H = Solder-plated, T = 100% Tin (Sn). Designates termination finish.
(3) To complete KEMET part number, insert E = None, S = 10 cycles +25°C, W = 10 cycles −55°C +85°C. Designates surge current option.
Refer to Ordering Information for additional detail.
Part Numbers marked in blue font are "Under Development." Engineering samples available upon request.

Table 1 – Ratings & Part Number Reference cont.

Rated Voltage VDC at 105°C	Rated Cap	Case Code/ Case Size	KEMET Part Number	DC Leakage	DF	ESR	Maximum Allowable Ripple Current	Maximum Operating Temp.	MSL
Not all parts are 105°C rated	µF	KEMET/EIA	(See below for part options)	µA at V_R, 25°C Maximum/ 5 Minutes	% at 25°C 120 Hz Maximum	mΩ at 25°C 100 kHz Maximum	(rms) mA at 45°C 100 kHz	°C	Reflow Temp ≤ 260°C
4	47	A/3216-18	T543A476(1)004A(2)(3)070	19	8	70	1,265	105	3
4	47	A/3216-18	T543A476(1)004A(2)(3)080	19	8	80	1,183	105	3
4	47	T/3528-12	T543T476(1)004A(2)(3)070	19	8	70	1,225	105	3
4	68	T/3528-12	T543T686(1)004A(2)(3)070	27	8	70	1,225	105	3
4	68	T/3528-12	T543T686(1)004A(2)(3)080	27	8	80	1,146	105	3
4	68	B/3528-21	T543B686(1)004A(2)(3)035	27	8	35	1,905	105	3
4	68	B/3528-21	T543B686(1)004A(2)(3)040	27	8	40	1,782	105	3
4	68	B/3528-21	T543B686(1)004A(2)(3)070	27	8	70	1,347	105	3
4	68	B/3528-21	T543B686(1)004A(2)(3)080	27	8	80	1,260	105	3
4	68	U/6032-15	T543U686(1)004A(2)(3)055	27	8	55	1,567	105	3
4	100	A/3216-18	T543A107(1)004A(2)(3)150	40	8	150	864	105	3
4	100	A/3216-18	T543A107(1)004A(2)(3)200	40	8	200	748	105	3
4	100	T/3528-12	T543T107(1)004A(2)(3)070	40	8	70	1,225	105	3
4	100	T/3528-12	T543T107(1)004A(2)(3)150	40	8	150	837	105	3
4	100	B/3528-21	T543B107(1)004A(2)(3)035	40	8	35	1,905	105	3
4	100	B/3528-21	T543B107(1)004A(2)(3)040	40	8	40	1,782	105	3
4	100	B/3528-21	T543B107(1)004A(2)(3)070	40	8	70	1,347	105	3
4	100	B/3528-21	T543B107(1)004A(2)(3)080	40	8	80	1,260	105	3
4	100	U/6032-15	T543U107(1)004A(2)(3)055	40	8	55	1,567	105	3
4	150	B/3528-21	T543B157(1)004A(2)(3)035	60	8	35	1,905	105	3
4	150	B/3528-21	T543B157(1)004A(2)(3)040	60	8	40	1,782	105	3
4	150	B/3528-21	T543B157(1)004A(2)(3)070	60	8	70	1,347	105	3
4	150	U/6032-15	T543U157(1)004A(2)(3)055	60	8	55	1,567	105	3
4	150	C/6032-28	T543C157(1)004A(2)(3)015	60	8	15	3,317	105	3
4	150	C/6032-28	T543C157(1)004A(2)(3)025	60	8	25	2,569	105	3
4	150	C/6032-28	T543C157(1)004A(2)(3)045	60	8	45	1,915	105	3
4	150	C/6032-28	T543C157(1)004A(2)(3)100	60	8	100	1,285	105	3
4	150	V/7343-20	T543V157(1)004A(2)(3)015	60	10	15	3,531	105	3
4	150	V/7343-20	T543V157(1)004A(2)(3)025	60	10	25	2,735	105	3
4	220	B/3528-21	T543B227(1)004A(2)(3)035	88	8	35	1,905	105	3
4	220	B/3528-21	T543B227(1)004A(2)(3)045	88	8	45	1,680	105	3
4	220	B/3528-21	T543B227(1)004A(2)(3)070	88	8	70	1,347	105	3
4	220	L/6032-19	T543L227(1)004A(2)(3)012	88	8	12	3,536	105	3
4	220	L/6032-19	T543L227(1)004A(2)(3)025	88	8	25	2,449	105	3
4	220	C/6032-28	T543C227(1)004A(2)(3)015	88	8	15	3,317	105	3
4	220	C/6032-28	T543C227(1)004A(2)(3)018	88	8	18	3,028	105	3
4	220	C/6032-28	T543C227(1)004A(2)(3)025	88	8	25	2,569	105	3
4	220	C/6032-28	T543C227(1)004A(2)(3)045	88	8	45	1,915	105	3
4	220	C/6032-28	T543C227(1)004A(2)(3)055	88	8	55	1,732	105	3
4	220	W/7343-15	T543W227(1)004A(2)(3)025	88	10	25	2,683	105	3
4	220	W/7343-15	T543W227(1)004A(2)(3)040	88	10	40	2,121	105	3
4	220	V/7343-20	T543V227(1)004A(2)(3)015	88	10	15	3,531	105	3
4	220	V/7343-20	T543V227(1)004A(2)(3)018	88	10	18	3,223	105	3
4	220	V/7343-20	T543V227(1)004A(2)(3)025	88	10	25	2,735	105	3
4	220	V/7343-20	T543V227(1)004A(2)(3)040	88	10	40	2,162	105	3
4	220	V/7343-20	T543V227(1)004A(2)(3)045	88	10	45	2,039	105	3
4	220	D-7343-31	T543D227(1)004A(2)(3)025	88	10	25	3,000	105	3
4	220	D-7343-31	T543D227(1)004A(2)(3)065	88	10	65	1,861	105	3
4	330	C/6032-28	T543C337(1)004A(2)(3)025	132	8	25	2,569	105	3
4	330	C/6032-28	T543C337(1)004A(2)(3)045	132	8	45	1,915	105	3
VDC at 105°C	µF	KEMET/EIA	(See below for part options)	µA at V_R, 25°C Maximum/ 5 Minutes	% at 25°C 120 Hz Maximum	mΩ at 25°C 100 kHz Maximum	(rms) mA at 45°C 100 kHz	°C	Reflow Temp ≤ 260°C
Rated Voltage	Rated Capacitance	Case Code/ Case Size	KEMET Part Number	DC Leakage	DF	ESR	Maximum Allowable Ripple Current	Maximum Operating Temp.	MSL

(1) To complete KEMET part number, insert M for ±20%, K for ±10%. Designates capacitance tolerance.
(2) To complete KEMET part number, H = Solder-plated, T = 100% Tin (Sn). Designates termination finish.
(3) To complete KEMET part number, insert E = None, S = 10 cycles +25°C, W = 10 cycles −55°C +85°C. Designates surge current option.
Refer to Ordering Information for additional detail.
Part Numbers marked in blue font are "Under Development." Engineering samples available upon request.

Table 1 – Ratings & Part Number Reference cont.

Rated Voltage VDC at 105°C	Rated Cap	Case Code/ Case Size	KEMET Part Number	DC Leakage	DF	ESR	Maximum Allowable Ripple Current	Maximum Operating Temp.	MSL
Not all parts are 105°C rated	µF	KEMET/EIA	(See below for part options)	µA at V_R, 25°C Maximum/ 5 Minutes	% at 25°C 120 Hz Maximum	mΩ at 25°C 100 kHz Maximum	(rms) mA at 45°C 100 kHz	°C	Reflow Temp ≤ 260°C
4	330	V/7343-20	T543V337(1)004A(2)(3)018	132	10	18	3,223	105	3
4	330	V/7343-20	T543V337(1)004A(2)(3)025	132	10	25	2,735	105	3
4	330	V/7343-20	T543V337(1)004A(2)(3)040	132	10	40	2,162	105	3
4	330	D-7343-31	T543D337(1)004A(2)(3)005	132	10	5	6,708	105	3
4	330	D-7343-31	T543D337(1)004A(2)(3)006	132	10	6	6,124	105	3
4	330	D-7343-31	T543D337(1)004A(2)(3)007	132	10	7	5,669	105	3
4	330	D-7343-31	T543D337(1)004A(2)(3)009	132	10	9	5,000	105	3
4	330	D-7343-31	T543D337(1)004A(2)(3)010	132	10	10	4,743	105	3
4	330	D-7343-31	T543D337(1)004A(2)(3)012	132	10	12	4,330	105	3
4	330	D-7343-31	T543D337(1)004A(2)(3)015	132	10	15	3,873	105	3
4	330	D-7343-31	T543D337(1)004A(2)(3)025	132	10	25	3,000	105	3
4	330	D-7343-31	T543D337(1)004A(2)(3)040	132	10	40	2,372	105	3
4	330	D-7343-31	T543D337(1)004A(2)(3)045	132	10	45	2,236	105	3
4	470	D-7343-31	T543D477(1)004A(2)(3)006	188	10	6	6,124	105	3
4	470	D-7343-31	T543D477(1)004A(2)(3)010	188	10	10	4,743	105	3
4	470	D-7343-31	T543D477(1)004A(2)(3)012	188	10	12	4,330	105	3
4	470	D-7343-31	T543D477(1)004A(2)(3)015	188	10	15	3,873	105	3
4	470	D-7343-31	T543D477(1)004A(2)(3)018	188	10	18	3,536	105	3
4	470	D-7343-31	T543D477(1)004A(2)(3)025	188	10	25	3,000	105	3
4	470	D-7343-31	T543D477(1)004A(2)(3)040	188	10	40	2,372	105	3
4	470	Y/7343-40	T543Y477(1)004A(2)(3)005	188	10	5	6,943	125	3
4	470	Y/7343-40	T543Y477(1)004A(2)(3)006	188	10	6	6,338	125	3
4	470	Y/7343-40	T543Y477(1)004A(2)(3)010	188	10	10	4,909	125	3
4	470	Y/7343-40	T543Y477(1)004A(2)(3)025	188	10	25	3,105	125	3
4	470	Y/7343-40	T543Y477(1)004A(2)(3)040	188	10	40	2,455	125	3
4	680	D-7343-31	T543D687(1)004A(2)(3)025	272	10	25	3,000	125	3
4	680	Y/7343-40	T543Y687(1)004A(2)(3)005	272	10	5	6,943	105	3
4	680	Y/7343-40	T543Y687(1)004A(2)(3)010	272	10	10	4,909	105	3
4	680	Y/7343-40	T543Y687(1)004A(2)(3)015	272	10	15	4,008	105	3
4	680	Y/7343-40	T543Y687(1)004A(2)(3)025	272	10	25	3,105	105	3
4	680	X/7343-43	T543X687(1)004A(2)(3)005	272	10	5	7,029	125	3
4	680	X/7343-43	T543X687(1)004A(2)(3)006	272	10	6	6,416	125	3
4	680	X/7343-43	T543X687(1)004A(2)(3)010	272	10	10	4,970	125	3
4	680	X/7343-43	T543X687(1)004A(2)(3)015	272	10	15	4,058	125	3
4	680	X/7343-43	T543X687(1)004A(2)(3)035	272	10	35	2,657	125	3
4	1,000	X/7343-43	T543X108(1)004A(2)(3)006	400	10	6	6,416	105	3
4	1,000	X/7343-43	T543X108(1)004A(2)(3)010	400	10	10	4,970	105	3
4	1,500	O/7360-43	T543O158M004A(2)(3)010	600	10	10	5,480	105	3
6.3	15	T/3528-12	T543T156(1)006A(2)(3)100	9	8	100	1,025	105	3
6.3	22	A/3216-18	T543A226(1)006A(2)(3)090	14	8	90	1,116	105	3
6.3	22	A/3216-18	T543A226(1)006A(2)(3)100	14	8	100	1,058	105	3
6.3	33	A/3216-18	T543A336(1)006A(2)(3)070	21	8	70	1,265	105	3
6.3	33	A/3216-18	T543A336(1)006A(2)(3)080	21	8	80	1,183	105	3
6.3	33	A/3216-18	T543A336(1)006A(2)(3)120	21	8	120	966	105	3
6.3	33	T/3528-12	T543T336(1)006A(2)(3)070	21	8	70	1,225	105	3
6.3	33	B/3528-21	T543B336(1)006A(2)(3)025	21	8	25	2,254	105	3
6.3	33	B/3528-21	T543B336(1)006A(2)(3)035	21	8	35	1,905	105	3
6.3	33	B/3528-21	T543B336(1)006A(2)(3)040	21	8	40	1,782	105	3
6.3	33	B/3528-21	T543B336(1)006A(2)(3)070	21	8	70	1,347	105	3
6.3	33	B/3528-21	T543B336(1)006A(2)(3)080	21	8	80	1,260	105	3
VDC at 105°C	µF	KEMET/EIA	(See below for part options)	µA at V_R, 25°C Maximum/ 5 Minutes	% at 25°C 120 Hz Maximum	mΩ at 25°C 100 kHz Maximum	(rms) mA at 45°C 100 kHz	°C	Reflow Temp ≤ 260°C
Rated Voltage	Rated Capacitance	Case Code/ Case Size	KEMET Part Number	DC Leakage	DF	ESR	Maximum Allowable Ripple Current	Maximum Operating Temp.	MSL

(1) To complete KEMET part number, insert M for ±20%, K for ±10%. Designates capacitance tolerance.
(2) To complete KEMET part number, H = Solder-plated, T = 100% Tin (Sn). Designates termination finish.
(3) To complete KEMET part number, insert E = None, S = 10 cycles +25°C, W = 10 cycles −55°C +85°C. Designates surge current option.
Refer to Ordering Information for additional detail.
Part Numbers marked in blue font are "Under Development." Engineering samples available upon request.

Table 1 – Ratings & Part Number Reference cont.

Rated Voltage VDC at 105°C	Rated Cap	Case Code/ Case Size	KEMET Part Number	DC Leakage	DF	ESR	Maximum Allowable Ripple Current	Maximum Operating Temp.	MSL
Not all parts are 105°C rated	µF	KEMET/EIA	(See below for part options)	µA at V_R, 25°C Maximum/ 5 Minutes	% at 25°C 120 Hz Maximum	mΩ at 25°C 100 kHz Maximum	(rms) mA at 45°C 100 kHz	°C	Reflow Temp ≤ 260°C
6.3	33	C/6032-28	T543C336(1)006A(2)(3)100	21	8	100	1,285	105	3
6.3	47	A/3216-18	T543A476(1)006A(2)(3)150	30	8	150	864	105	3
6.3	47	T/3528-12	T543T476(1)006A(2)(3)070	30	8	70	1,225	105	3
6.3	47	T/3528-12	T543T476(1)006A(2)(3)080	30	8	80	1,146	105	3
6.3	47	B/3528-21	T543B476(1)006A(2)(3)025	30	8	25	2,254	125	3
6.3	47	B/3528-21	T543B476(1)006A(2)(3)035	30	8	35	1,905	105	3
6.3	47	B/3528-21	T543B476(1)006A(2)(3)040	30	8	40	1,782	105	3
6.3	47	B/3528-21	T543B476(1)006A(2)(3)070	30	8	70	1,347	105	3
6.3	47	B/3528-21	T543B476(1)006A(2)(3)080	30	8	80	1,260	105	3
6.3	68	A/3216-18	T543A686(1)006A(2)(3)150	43	8	150	864	105	3
6.3	68	T/3528-12	T543T686(1)006A(2)(3)070	43	8	70	1,225	105	3
6.3	68	T/3528-12	T543T686(1)006A(2)(3)150	43	8	150	837	105	3
6.3	68	B/3528-21	T543B686(1)006A(2)(3)025	43	8	25	2,254	105	3
6.3	68	B/3528-21	T543B686(1)006A(2)(3)035	43	8	35	1,905	105	3
6.3	68	B/3528-21	T543B686(1)006A(2)(3)040	43	8	40	1,782	105	3
6.3	68	B/3528-21	T543B686(1)006A(2)(3)070	43	8	70	1,347	105	3
6.3	68	B/3528-21	T543B686(1)006A(2)(3)080	43	8	80	1,260	105	3
6.3	68	U/6032-15	T543U686(1)006A(2)(3)055	43	8	55	1,567	105	3
6.3	68	U/6032-15	T543U686(1)006A(2)(3)070	43	8	70	1,389	105	3
6.3	68	C/6032-28	T543C686(1)006A(2)(3)100	43	8	100	1,285	105	3
6.3	100	T/3528-12	T543T107(1)006A(2)(3)070	63	8	70	1,225	105	3
6.3	100	B/3528-21	T543B107(1)006A(2)(3)025	63	8	25	2,254	105	3
6.3	100	B/3528-21	T543B107(1)006A(2)(3)035	63	8	35	1,905	105	3
6.3	100	B/3528-21	T543B107(1)006A(2)(3)040	63	8	40	1,782	105	3
6.3	100	B/3528-21	T543B107(1)006A(2)(3)045	63	8	45	1,680	105	3
6.3	100	B/3528-21	T543B107(1)006A(2)(3)070	63	8	70	1,347	105	3
6.3	100	U/6032-15	T543U107(1)006A(2)(3)055	63	8	55	1,567	105	3
6.3	100	C/6032-28	T543C107(1)006A(2)(3)025	63	8	25	2,569	105	3
6.3	100	C/6032-28	T543C107(1)006A(2)(3)045	63	8	45	1,915	105	3
6.3	100	W/7343-15	T543W107(1)006A(2)(3)040	63	10	40	2,121	105	3
6.3	100	V/7343-20	T543V107(1)006A(2)(3)015	63	10	15	3,531	105	3
6.3	100	V/7343-20	T543V107(1)006A(2)(3)045	63	10	45	2,039	105	3
6.3	120	B/3528-21	T543B127(1)006A(2)(3)035	76	8	35	1,905	105	3
6.3	150	M/3528-15	T543M157(1)006A(2)(3)070	95	8	70	1,309	105	3
6.3	150	M/3528-15	T543M157(1)006A(2)(3)150	95	8	150	894	105	3
6.3	150	B/3528-21	T543B157(1)006A(2)(3)025	95	8	25	2,254	105	3
6.3	150	B/3528-21	T543B157(1)006A(2)(3)035	95	8	35	1,905	105	3
6.3	150	B/3528-21	T543B157(1)006A(2)(3)045	95	8	45	1,680	105	3
6.3	150	B/3528-21	T543B157(1)006A(2)(3)070	95	8	70	1,347	105	3
6.3	150	U/6032-15	T543U157(1)006A(2)(3)045	95	8	45	1,732	105	3
6.3	150	U/6032-15	T543U157(1)006A(2)(3)055	95	8	55	1,567	105	3
6.3	150	L/6032-19	T543L157(1)006A(2)(3)012	95	8	12	3,536	105	3
6.3	150	L/6032-19	T543L157(1)006A(2)(3)025	95	8	25	2,449	105	3
6.3	150	C/6032-28	T543C157(1)006A(2)(3)015	95	8	15	3,317	105	3
6.3	150	C/6032-28	T543C157(1)006A(2)(3)025	95	8	25	2,569	105	3
6.3	150	C/6032-28	T543C157(1)006A(2)(3)045	95	8	45	1,915	105	3
6.3	150	C/6032-28	T543C157(1)006A(2)(3)055	95	8	55	1,732	105	3
6.3	150	W/7343-15	T543W157(1)006A(2)(3)025	95	10	25	2,683	105	3
6.3	150	W/7343-15	T543W157(1)006A(2)(3)040	95	10	40	2,121	105	3
6.3	150	V/7343-20	T543V157(1)006A(2)(3)015	95	10	15	3,531	105	3
VDC at 105°C	µF	KEMET/EIA	(See below for part options)	µA at V_R, 25°C Maximum/ 5 Minutes	% at 25°C 120 Hz Maximum	mΩ at 25°C 100 kHz Maximum	(rms) mA at 45°C 100 kHz	°C	Reflow Temp ≤ 260°C
Rated Voltage	Rated Capacitance	Case Code/ Case Size	KEMET Part Number	DC Leakage	DF	ESR	Maximum Allowable Ripple Current	Maximum Operating Temp.	MSL

(1) To complete KEMET part number, insert M for ±20%, K for ±10%. Designates capacitance tolerance.
(2) To complete KEMET part number, H = Solder-plated, T = 100% Tin (Sn). Designates termination finish.
(3) To complete KEMET part number, insert E = None, S = 10 cycles +25°C, W = 10 cycles −55°C +85°C. Designates surge current option.
Refer to Ordering Information for additional detail.
Part Numbers marked in blue font are "Under Development." Engineering samples available upon request.

Table 1 – Ratings & Part Number Reference cont.

Rated Voltage VDC at 105°C	Rated Cap	Case Code/ Case Size	KEMET Part Number	DC Leakage	DF	ESR	Maximum Allowable Ripple Current	Maximum Operating Temp.	MSL
Not all parts are 105°C rated	µF	KEMET/EIA	(See below for part options)	µA at V_R, 25°C Maximum/ 5 Minutes	% at 25°C 120 Hz Maximum	mΩ at 25°C 100 kHz Maximum	(rms) mA at 45°C 100 kHz	°C	Reflow Temp ≤ 260°C
6.3	150	V/7343-20	T543V157(1)006A(2)(3)018	95	10	18	3,223	105	3
6.3	150	V/7343-20	T543V157(1)006A(2)(3)025	95	10	25	2,735	105	3
6.3	150	V/7343-20	T543V157(1)006A(2)(3)040	95	10	40	2,162	105	3
6.3	150	V/7343-20	T543V157(1)006A(2)(3)045	95	10	45	2,039	105	3
6.3	150	D-7343-31	T543D157(1)006A(2)(3)015	95	10	15	3,873	105	3
6.3	150	D-7343-31	T543D157(1)006A(2)(3)025	95	10	25	3,000	105	3
6.3	150	D-7343-31	T543D157(1)006A(2)(3)055	95	10	55	2,023	105	3
6.3	220	B/3528-21	T543B227(1)006A(2)(3)035	139	8	35	1,905	105	3
6.3	220	B/3528-21	T543B227(1)006A(2)(3)045	139	8	45	1,680	105	3
6.3	220	B/3528-21	T543B227(1)006A(2)(3)070	139	8	70	1,347	105	3
6.3	220	C/6032-28	T543C227(1)006A(2)(3)015	139	8	15	3,317	105	3
6.3	220	C/6032-28	T543C227(1)006A(2)(3)018	139	8	18	3,028	105	3
6.3	220	C/6032-28	T543C227(1)006A(2)(3)025	139	8	25	2,569	105	3
6.3	220	C/6032-28	T543C227(1)006A(2)(3)045	139	8	45	1,915	105	3
6.3	220	V/7343-20	T543V227(1)006A(2)(3)018	139	10	18	3,223	105	3
6.3	220	V/7343-20	T543V227(1)006A(2)(3)025	139	10	25	2,735	105	3
6.3	220	V/7343-20	T543V227(1)006A(2)(3)040	139	10	40	2,162	105	3
6.3	220	D-7343-31	T543D227(1)006A(2)(3)005	139	10	5	6,708	125	3
6.3	220	D-7343-31	T543D227(1)006A(2)(3)006	139	10	6	6,124	125	3
6.3	220	D-7343-31	T543D227(1)006A(2)(3)007	139	10	7	5,669	125	3
6.3	220	D-7343-31	T543D227(1)006A(2)(3)009	139	10	9	5,000	125	3
6.3	220	D-7343-31	T543D227(1)006A(2)(3)010	139	10	10	4,743	125	3
6.3	220	D-7343-31	T543D227(1)006A(2)(3)015	139	10	15	3,873	125	3
6.3	220	D-7343-31	T543D227(1)006A(2)(3)018	139	10	18	3,536	125	3
6.3	220	D-7343-31	T543D227(1)006A(2)(3)025	139	10	25	3,000	125	3
6.3	220	D-7343-31	T543D227(1)006A(2)(3)040	139	10	40	2,372	125	3
6.3	220	D-7343-31	T543D227(1)006A(2)(3)050	139	10	50	2,121	125	3
6.3	330	V/7343-20	T543V337(1)006A(2)(3)015	208	10	15	3,531	105	3
6.3	330	V/7343-20	T543V337(1)006A(2)(3)018	208	10	18	3,223	105	3
6.3	330	V/7343-20	T543V337(1)006A(2)(3)025	208	10	25	2,735	105	3
6.3	330	V/7343-20	T543V337(1)006A(2)(3)040	208	10	40	2,162	105	3
6.3	330	V/7343-20	T543V337(1)006A(2)(3)045	208	10	45	2,039	105	3
6.3	330	D-7343-31	T543D337(1)006A(2)(3)006	208	10	6	6,124	125	3
6.3	330	D-7343-31	T543D337(1)006A(2)(3)009	208	10	9	5,000	125	3
6.3	330	D-7343-31	T543D337(1)006A(2)(3)010	208	10	10	4,743	125	3
6.3	330	D-7343-31	T543D337(1)006A(2)(3)015	208	10	15	3,873	125	3
6.3	330	D-7343-31	T543D337(1)006A(2)(3)018	208	10	18	3,536	125	3
6.3	330	D-7343-31	T543D337(1)006A(2)(3)025	208	10	25	3,000	125	3
6.3	330	D-7343-31	T543D337(1)006A(2)(3)040	208	10	40	2,372	125	3
6.3	330	D-7343-31	T543D337(1)006A(2)(3)045	208	10	45	2,236	125	3
6.3	330	Y/7343-40	T543Y337(1)006A(2)(3)005	208	10	5	6,943	125	3
6.3	330	Y/7343-40	T543Y337(1)006A(2)(3)006	208	10	6	6,338	125	3
6.3	330	Y/7343-40	T543Y337(1)006A(2)(3)010	208	10	10	4,909	125	3
6.3	330	Y/7343-40	T543Y337(1)006A(2)(3)015	208	10	15	4,008	125	3
6.3	330	Y/7343-40	T543Y337(1)006A(2)(3)025	208	10	25	3,105	125	3
6.3	330	Y/7343-40	T543Y337(1)006A(2)(3)040	208	10	40	2,455	125	3
6.3	470	W/7343-15	T543W477(1)006A(2)(3)055	296	10	55	1,809	85	3
6.3	470	W/7343-15	T543W477(1)006A(2)(3)035	296	10	35	2,268	85	3
6.3	470	V/7343-20	T543V477(1)006A(2)(3)055	296	10	55	1,844	85	3
6.3	470	D-7343-31	T543D477(1)006A(2)(3)015	296	10	15	3,873	105	3
VDC at 105°C	µF	KEMET/EIA	(See below for part options)	µA at V_R, 25°C Maximum/ 5 Minutes	% at 25°C 120 Hz Maximum	mΩ at 25°C 100 kHz Maximum	(rms) mA at 45°C 100 kHz	°C	Reflow Temp ≤ 260°C
Rated Voltage	Rated Capacitance	Case Code/ Case Size	KEMET Part Number	DC Leakage	DF	ESR	Maximum Allowable Ripple Current	Maximum Operating Temp.	MSL

(1) To complete KEMET part number, insert M for ±20%, K for ±10%. Designates capacitance tolerance.
(2) To complete KEMET part number, H = Solder-plated, T = 100% Tin (Sn). Designates termination finish.
(3) To complete KEMET part number, insert E = None, S = 10 cycles +25°C, W = 10 cycles −55°C +85°C. Designates surge current option.
Refer to Ordering Information for additional detail.
Part Numbers marked in blue font are "Under Development." Engineering samples available upon request.

Table 1 – Ratings & Part Number Reference cont.

Rated Voltage VDC at 105°C	Rated Cap	Case Code/ Case Size	KEMET Part Number	DC Leakage	DF	ESR	Maximum Allowable Ripple Current	Maximum Operating Temp.	MSL
Not all parts are 105°C rated	µF	KEMET/EIA	(See below for part options)	µA at V_R, 25°C Maximum/ 5 Minutes	% at 25°C 120 Hz Maximum	mΩ at 25°C 100 kHz Maximum	(rms) mA at 45°C 100 kHz	°C	Reflow Temp ≤ 260°C
6.3	470	D-7343-31	T543D477(1)006A(2)(3)025	296	10	25	3,000	105	3
6.3	470	D-7343-31	T543D477(1)006A(2)(3)030	296	10	30	2,739	105	3
6.3	470	Y/7343-40	T543Y477(1)006A(2)(3)005	296	10	5	6,943	105	3
6.3	470	Y/7343-40	T543Y477(1)006A(2)(3)010	296	10	10	4,909	105	3
6.3	470	Y/7343-40	T543Y477(1)006A(2)(3)015	296	10	15	4,008	105	3
6.3	470	Y/7343-40	T543Y477(1)006A(2)(3)018	296	10	18	3,659	105	3
6.3	470	Y/7343-40	T543Y477(1)006A(2)(3)025	296	10	25	3,105	105	3
6.3	470	Y/7343-40	T543Y477(1)006A(2)(3)035	296	10	35	2,624	105	3
6.3	470	X/7343-43	T543X477(1)006A(2)(3)005	296	10	5	7,029	125	3
6.3	470	X/7343-43	T543X477(1)006A(2)(3)006	296	10	6	6,416	125	3
6.3	470	X/7343-43	T543X477(1)006A(2)(3)010	296	10	10	4,970	125	3
6.3	470	X/7343-43	T543X477(1)006A(2)(3)018	296	10	18	3,704	125	3
6.3	470	X/7343-43	T543X477(1)006A(2)(3)035	296	10	35	2,657	125	3
6.3	470	X/7343-43	T543X477(1)006A(2)(3)040	296	10	40	2,485	125	3
6.3	680	X/7343-43	T543X687(1)006A(2)(3)010	428	10	10	4,970	125	3
6.3	680	X/7343-43	T543X687(1)006A(2)(3)018	428	10	18	3,704	125	3
6.3	1,000	H/7360-20	T543H108(1)006A(2)(3)055	630	20	55	1,844	85	3
6.3	1,000	O/7360-43	T543O108M006A(2)(3)010	630	10	10	5,480	105	3
6.3	1,000	O/7360-43	T543O108M006A(2)(3)015	630	10	15	4,470	105	3
6.3	1,500	H/7360-20	T543H158(1)006A(2)(3)055	945	20	55	1,844	85	3
8	33	T/3528-12	T543T336(1)008A(2)(3)070	26	8	70	1,225	105	3
8	33	T/3528-12	T543T336(1)008A(2)(3)080	26	8	80	1,146	105	3
8	33	B/3528-21	T543B336(1)008A(2)(3)025	26	8	25	2,254	105	3
8	33	B/3528-21	T543B336(1)008A(2)(3)035	26	8	35	1,905	105	3
8	33	B/3528-21	T543B336(1)008A(2)(3)040	26	8	40	1,782	105	3
8	33	B/3528-21	T543B336(1)008A(2)(3)070	26	8	70	1,347	105	3
8	33	U/6032-15	T543U336(1)008A(2)(3)070	26	8	70	1,389	105	3
8	47	B/3528-21	T543B476(1)008A(2)(3)035	38	8	35	1,905	105	3
8	47	B/3528-21	T543B476(1)008A(2)(3)070	38	8	70	1,347	105	3
8	150	V/7343-20	T543V157(1)008A(2)(3)040	120	10	40	2,162	105	3
8	150	D-7343-31	T543D157(1)008A(2)(3)025	120	10	25	3,000	105	3
8	150	D-7343-31	T543D157(1)008A(2)(3)040	120	10	40	2,372	105	3
8	150	D-7343-31	T543D157(1)008A(2)(3)055	120	10	55	2,023	105	3
10	10	A/3216-18	T543A106(1)010A(2)(3)080	10	8	80	1,183	105	3
10	15	A/3216-18	T543A156(1)010A(2)(3)080	15	8	80	1,183	105	3
10	22	A/3216-18	T543A226(1)010A(2)(3)080	22	8	80	1,183	105	3
10	22	B/3528-21	T543B226(1)010A(2)(3)080	22	8	80	1,260	105	3
10	33	T/3528-12	T543T336(1)010A(2)(3)070	33	8	70	1,225	105	3
10	33	T/3528-12	T543T336(1)010A(2)(3)080	33	8	80	1,146	105	3
10	33	B/3528-21	T543B336(1)010A(2)(3)025	33	8	25	2,254	105	3
10	33	B/3528-21	T543B336(1)010A(2)(3)035	33	8	35	1,905	105	3
10	33	B/3528-21	T543B336(1)010A(2)(3)040	33	8	40	1,782	105	3
10	33	B/3528-21	T543B336(1)010A(2)(3)070	33	8	70	1,347	105	3
10	33	B/3528-21	T543B336(1)010A(2)(3)080	33	8	80	1,260	105	3
10	33	U/6032-15	T543U336(1)010A(2)(3)070	33	8	70	1,389	105	3
10	47	B/3528-21	T543B476(1)010A(2)(3)035	47	8	35	1,905	105	3
10	47	B/3528-21	T543B476(1)010A(2)(3)070	47	8	70	1,347	105	3
10	47	U/6032-15	T543U476(1)010A(2)(3)055	47	8	55	1,567	105	3
10	47	C/6032-28	T543C476(1)010A(2)(3)100	47	8	100	1,285	105	3
10	68	U/6032-15	T543U686(1)010A(2)(3)055	68	8	55	1,567	105	3
VDC at 105°C	µF	KEMET/EIA	(See below for part options)	µA at V_R, 25°C Maximum/ 5 Minutes	% at 25°C 120 Hz Maximum	mΩ at 25°C 100 kHz Maximum	(rms) mA at 45°C 100 kHz	°C	Reflow Temp ≤ 260°C
Rated Voltage	Rated Capacitance	Case Code/ Case Size	KEMET Part Number	DC Leakage	DF	ESR	Maximum Allowable Ripple Current	Maximum Operating Temp.	MSL

(1) To complete KEMET part number, insert M for ±20%, K for ±10%. Designates capacitance tolerance.
(2) To complete KEMET part number, H = Solder-plated, T = 100% Tin (Sn). Designates termination finish.
(3) To complete KEMET part number, insert E = None, S = 10 cycles +25°C, W = 10 cycles −55°C +85°C. Designates surge current option.
Refer to Ordering Information for additional detail.
Part Numbers marked in blue font are "Under Development." Engineering samples available upon request.

Table 1 – Ratings & Part Number Reference cont.

Rated Voltage VDC at 105°C	Rated Cap	Case Code/ Case Size	KEMET Part Number	DC Leakage	DF	ESR	Maximum Allowable Ripple Current	Maximum Operating Temp.	MSL
Not all parts are 105°C rated	µF	KEMET/EIA	(See below for part options)	µA at V_R, 25°C Maximum/ 5 Minutes	% at 25°C 120 Hz Maximum	mΩ at 25°C 100 kHz Maximum	(rms) mA at 45°C 100 kHz	°C	Reflow Temp ≤ 260°C
10	68	C/6032-28	T543C686(1)010A(2)(3)045	68	8	45	1,915	105	3
10	68	W/7343-15	T543W686(1)010A(2)(3)025	68	10	25	2,683	105	3
10	68	W/7343-15	T543W686(1)010A(2)(3)040	68	10	40	2,121	105	3
10	68	V/7343-20	T543V686(1)010A(2)(3)025	68	10	25	2,735	105	3
10	68	V/7343-20	T543V686(1)010A(2)(3)040	68	10	40	2,162	105	3
10	68	V/7343-20	T543V686(1)010A(2)(3)045	68	10	45	2,039	105	3
10	68	V/7343-20	T543V686(1)010A(2)(3)060	68	10	60	1,765	105	3
10	68	V/7343-20	T543V686(1)010A(2)(3)100	68	10	100	1,367	105	3
10	68	D-7343-31	T543D686(1)010A(2)(3)100	68	10	100	1,500	105	3
10	100	B/3528-21	T543B107(1)010A(2)(3)150	100	10	150	920	105	3
10	100	L/6032-19	T543L107(1)010A(2)(3)025	100	8	25	2,449	105	3
10	100	C/6032-28	T543C107(1)010A(2)(3)025	100	8	25	2,569	105	3
10	100	C/6032-28	T543C107(1)010A(2)(3)045	100	8	45	1,915	105	3
10	100	W/7343-15	T543W107(1)010A(2)(3)040	100	10	40	2,121	105	3
10	100	V/7343-20	T543V107(1)010A(2)(3)018	100	10	18	3,223	105	3
10	100	V/7343-20	T543V107(1)010A(2)(3)025	100	10	25	2,735	105	3
10	100	V/7343-20	T543V107(1)010A(2)(3)045	100	10	45	2,039	105	3
10	100	V/7343-20	T543V107(1)010A(2)(3)050	100	10	50	1,934	105	3
10	100	D-7343-31	T543D107(1)010A(2)(3)018	100	10	18	3,536	125	3
10	100	D-7343-31	T543D107(1)010A(2)(3)025	100	10	25	3,000	125	3
10	100	D-7343-31	T543D107(1)010A(2)(3)055	100	10	55	2,023	125	3
10	100	D-7343-31	T543D107(1)010A(2)(3)080	100	10	80	1,677	125	3
10	150	C/6032-28	T543C157(1)010A(2)(3)055	150	8	55	1,732	105	3
10	150	V/7343-20	T543V157(1)010A(2)(3)025	150	10	25	2,735	105	3
10	150	V/7343-20	T543V157(1)010A(2)(3)040	150	10	40	2,162	105	3
10	150	D-7343-31	T543D157(1)010A(2)(3)005	150	10	5	6,708	125	3
10	150	D-7343-31	T543D157(1)010A(2)(3)006	150	10	6	6,124	125	3
10	150	D-7343-31	T543D157(1)010A(2)(3)010	150	10	10	4,743	125	3
10	150	D-7343-31	T543D157(1)010A(2)(3)015	150	10	15	3,873	125	3
10	150	D-7343-31	T543D157(1)010A(2)(3)018	150	10	18	3,536	125	3
10	150	D-7343-31	T543D157(1)010A(2)(3)025	150	10	25	3,000	125	3
10	150	D-7343-31	T543D157(1)010A(2)(3)040	150	10	40	2,372	125	3
10	150	D-7343-31	T543D157(1)010A(2)(3)055	150	10	55	2,023	125	3
10	150	Y/7343-40	T543Y157(1)010A(2)(3)018	150	10	18	3,659	105	3
10	150	Y/7343-40	T543Y157(1)010A(2)(3)025	150	10	25	3,105	105	3
10	220	V/7343-20	T543V227(1)010A(2)(3)025	220	10	25	2,735	105	3
10	220	V/7343-20	T543V227(1)010A(2)(3)045	220	10	45	2,039	105	3
10	220	D-7343-31	T543D227(1)010A(2)(3)006	220	10	6	6,124	125	3
10	220	D-7343-31	T543D227(1)010A(2)(3)010	220	10	10	4,743	125	3
10	220	D-7343-31	T543D227(1)010A(2)(3)018	220	10	18	3,536	125	3
10	220	D-7343-31	T543D227(1)010A(2)(3)025	220	10	25	3,000	125	3
10	220	D-7343-31	T543D227(1)010A(2)(3)040	220	10	40	2,372	125	3
10	220	Y/7343-40	T543Y227(1)010A(2)(3)006	220	10	6	6,338	125	3
10	220	Y/7343-40	T543Y227(1)010A(2)(3)010	220	10	10	4,909	125	3
10	220	Y/7343-40	T543Y227(1)010A(2)(3)040	220	10	40	2,455	125	3
10	330	Y/7343-40	T543Y337(1)010A(2)(3)015	330	10	15	4,008	105	3
10	330	Y/7343-40	T543Y337(1)010A(2)(3)035	330	10	35	2,624	105	3
10	330	X/7343-43	T543X337(1)010A(2)(3)005	330	10	5	7,029	125	3
10	330	X/7343-43	T543X337(1)010A(2)(3)006	330	10	6	6,416	125	3
10	330	X/7343-43	T543X337(1)010A(2)(3)010	330	10	10	4,970	125	3
VDC at 105°C	µF	KEMET/EIA	(See below for part options)	µA at V_R, 25°C Maximum/ 5 Minutes	% at 25°C 120 Hz Maximum	mΩ at 25°C 100 kHz Maximum	(rms) mA at 45°C 100 kHz	°C	Reflow Temp ≤ 260°C
Rated Voltage	Rated Capacitance	Case Code/ Case Size	KEMET Part Number	DC Leakage	DF	ESR	Maximum Allowable Ripple Current	Maximum Operating Temp.	MSL

(1) To complete KEMET part number, insert M for ±20%, K for ±10%. Designates capacitance tolerance.
(2) To complete KEMET part number, H = Solder-plated, T = 100% Tin (Sn). Designates termination finish.
(3) To complete KEMET part number, insert E = None, S = 10 cycles +25°C, W = 10 cycles −55°C +85°C. Designates surge current option.
Refer to Ordering Information for additional detail.
Part Numbers marked in blue font are "Under Development." Engineering samples available upon request.

Table 1 – Ratings & Part Number Reference cont.

Rated Voltage VDC at 105°C	Rated Cap	Case Code/ Case Size	KEMET Part Number	DC Leakage	DF	ESR	Maximum Allowable Ripple Current	Maximum Operating Temp.	MSL
Not all parts are 105°C rated	µF	KEMET/EIA	(See below for part options)	µA at V_R, 25°C Maximum/ 5 Minutes	% at 25°C 120 Hz Maximum	mΩ at 25°C 100 kHz Maximum	(rms) mA at 45°C 100 kHz	°C	Reflow Temp ≤ 260°C
10	330	X/7343-43	T543X337(1)010A(2)(3)025	330	10	25	3,143	125	3
10	330	X/7343-43	T543X337(1)010A(2)(3)040	330	10	40	2,485	125	3
10	470	X/7343-43	T543X477(1)010A(2)(3)020	470	10	20	3,674	105	3
10	680	O/7360-43	T543O687M010A(2)(3)015	680	10	15	4,470	105	3
12.5	10	T/3528-12	T543T106(1)12RA(2)(3)150	13	8	150	837	105	3
12.5	15	T/3528-12	T543T156(1)12RA(2)(3)080	19	8	80	1,146	105	3
12.5	330	X/7343-43	T543X337(1)12RA(2)(3)015	413	10	15	4,058	105	3
16	10	B/3528-21	T543B106(1)016A(2)(3)100	16	8	100	1,127	105	3
16	22	C/6032-28	T543C226(1)016A(2)(3)080	35	8	80	1,436	105	3
16	33	W/7343-15	T543W336(1)016A(2)(3)045	53	10	45	2,000	105	3
16	33	V/7343-20	T543V336(1)016A(2)(3)045	53	10	45	2,039	105	3
16	33	V/7343-20	T543V336(1)016A(2)(3)060	53	10	60	1,765	105	3
16	33	V/7343-20	T543V336(1)016A(2)(3)070	53	10	70	1,634	105	3
16	47	W/7343-15	T543W476(1)016A(2)(3)045	75	10	45	2,000	105	3
16	47	V/7343-20	T543V476(1)016A(2)(3)045	75	10	45	2,039	105	3
16	47	V/7343-20	T543V476(1)016A(2)(3)070	75	10	70	1,634	105	3
16	47	V/7343-20	T543V476(1)016A(2)(3)080	75	10	80	1,529	105	3
16	47	D-7343-31	T543D476(1)016A(2)(3)035	75	10	35	2,535	125	3
16	47	D-7343-31	T543D476(1)016A(2)(3)065	75	10	65	1,861	125	3
16	47	D-7343-31	T543D476(1)016A(2)(3)070	75	10	70	1,793	125	3
16	68	V/7343-20	T543V686(1)016A(2)(3)050	109	10	50	1,934	105	3
16	68	V/7343-20	T543V686(1)016A(2)(3)090	109	10	90	1,441	105	3
16	100	V/7343-20	T543V107(1)016A(2)(3)050	160	10	50	1,934	105	3
16	100	D-7343-31	T543D107(1)016A(2)(3)035	160	10	35	2,535	125	3
16	100	D-7343-31	T543D107(1)016A(2)(3)050	160	10	50	2,121	125	3
16	150	X/7343-43	T543X157(1)016A(2)(3)015	240	10	15	4,058	125	3
16	150	X/7343-43	T543X157(1)016A(2)(3)025	240	10	25	3,143	125	3
16	150	X/7343-43	T543X157(1)016A(2)(3)040	240	10	40	2,485	125	3
16	150	X/7343-43	T543X157(1)016A(2)(3)080	240	10	80	1,757	125	3
16	220	X/7343-43	T543X227(1)016A(2)(3)035	352	10	35	2,657	125	3
16	220	X/7343-43	T543X227(1)016A(2)(3)080	352	10	80	1,757	125	3
16	330	X/7343-43	T543X337(1)016A(2)(3)025	528	10	25	3,143	125	3
16	330	X/7343-43	T543X337(1)016A(2)(3)050	528	10	50	2,223	125	3
16	470	O/7360-43	T543O477M016A(2)(3)020	752	10	20	3,870	105	3
16	470	O/7360-43	T543O477M016A(2)(3)040	752	10	40	2,740	105	3
20	22	V/7343-20	T543V226(1)020A(2)(3)040	44	10	40	2,162	105	3
20	22	V/7343-20	T543V226(1)020A(2)(3)045	44	10	45	2,039	105	3
20	22	V/7343-20	T543V226(1)020A(2)(3)090	44	10	90	1,441	105	3
20	22	D-7343-31	T543D226(1)020A(2)(3)040	44	10	40	2,372	105	3
20	22	D-7343-31	T543D226(1)020A(2)(3)045	44	10	45	2,236	105	3
20	22	D-7343-31	T543D226(1)020A(2)(3)090	44	10	90	1,581	105	3
20	33	D-7343-31	T543D336(1)020A(2)(3)060	66	10	60	1,936	125	3
20	47	V/7343-20	T543V476(1)020A(2)(3)055	94	10	55	1,844	105	3
20	47	V/7343-20	T543V476(1)020A(2)(3)090	94	10	90	1,441	105	3
20	47	D-7343-31	T543D476(1)020A(2)(3)055	94	10	55	2,023	105	3
20	100	X/7343-43	T543X107(1)020A(2)(3)035	200	10	35	2,657	125	3
20	100	X/7343-43	T543X107(1)020A(2)(3)050	200	10	50	2,223	125	3
25	10	B/3528-21	T543B106(1)025A(2)(3)100	25	10	100	1,127	105	3
25	15	V/7343-20	T543V156(1)025A(2)(3)090	38	10	90	1,441	105	3
25	15	D-7343-31	T543D156(1)025A(2)(3)060	38	10	60	1,936	125	3
VDC at 105°C	µF	KEMET/EIA	(See below for part options)	µA at V_R, 25°C Maximum/ 5 Minutes	% at 25°C 120 Hz Maximum	mΩ at 25°C 100 kHz Maximum	(rms) mA at 45°C 100 kHz	°C	Reflow Temp ≤ 260°C
Rated Voltage	Rated Capacitance	Case Code/ Case Size	KEMET Part Number	DC Leakage	DF	ESR	Maximum Allowable Ripple Current	Maximum Operating Temp.	MSL

(1) To complete KEMET part number, insert M for ±20%, K for ±10%. Designates capacitance tolerance.
(2) To complete KEMET part number, H = Solder-plated, T = 100% Tin (Sn). Designates termination finish.
(3) To complete KEMET part number, insert E = None, S = 10 cycles +25°C, W = 10 cycles −55°C +85°C. Designates surge current option.
Refer to Ordering Information for additional detail.
Part Numbers marked in blue font are "Under Development." Engineering samples available upon request.

Table 1 – Ratings & Part Number Reference cont.

Rated Voltage VDC at 105°C	Rated Cap	Case Code/ Case Size	KEMET Part Number	DC Leakage	DF	ESR	Maximum Allowable Ripple Current	Maximum Operating Temp.	MSL
Not all parts are 105°C rated	µF	KEMET/EIA	(See below for part options)	µA at V_R, 25°C Maximum/ 5 Minutes	% at 25°C 120 Hz Maximum	mΩ at 25°C 100 kHz Maximum	(rms) mA at 45°C 100 kHz	°C	Reflow Temp ≤ 260°C
25	15	D-7343-31	T543D156(1)025A(2)(3)080	38	10	80	1,677	125	3
25	22	C/6032-28	T543C226(1)025A(2)(3)080	55	8	80	1,436	105	3
25	22	D-7343-31	T543D226(1)025A(2)(3)075	55	10	75	1,732	125	3
25	22	V/7343-20	T543V226(1)025A(2)(3)060	55	10	60	1,765	105	3
25	22	V/7343-20	T543V226(1)025A(2)(3)090	55	10	90	1,441	105	3
25	33	V/7343-20	T543V336(1)025A(2)(3)060	83	10	60	1,765	105	3
25	33	D-7343-31	T543D336(1)025A(2)(3)060	83	10	60	1,936	105	3
25	68	X/7343-43	T543X686(1)025A(2)(3)035	170	10	35	2,657	125	3
25	68	X/7343-43	T543X686(1)025A(2)(3)050	170	10	50	2,223	125	3
25	100	X/7343-43	T543X107(1)025A(2)(3)060	250	10	60	2,029	125	3
25	150	O/7360-43	T543O157M025A(2)(3)045	375	10	45	2,580	105	3
30	22	D-7343-31	T543D226(1)030A(2)(3)075	66	10	75	1,732	105	3
30	33	D-7343-31	T543D336(1)030A(2)(3)100	99	10	100	1,500	105	3
30	47	X/7343-43	T543X476(1)030A(2)(3)050	141	10	50	2,223	105	3
30	68	X/7343-43	T543X686(1)030A(2)(3)035	204	10	35	2,657	125	3
30	68	X/7343-43	T543X686(1)030A(2)(3)050	204	10	50	2,223	125	3
30	100	X/7343-43	T543X107(1)030A(2)(3)035	300	10	35	2,657	105	3
30	100	X/7343-43	T543X107(1)030A(2)(3)060	300	10	60	2,029	105	3
30	100	X/7343-43	T543X107(1)030A(2)(3)070	300	10	70	1,878	105	3
30	150	X/7343-43	T543X157(1)030A(2)(3)035	450	10	35	2,657	105	3
30	150	O/7360-43	T543O157M030A(2)(3)030	450	10	30	3,160	105	3
30	150	O/7360-43	T543O157M030A(2)(3)045	450	10	45	2,580	105	3
30	150	O/7360-43	T543O157M030A(2)(3)055	450	10	55	2,340	105	3
35	15	V/7343-20	T543V156(1)035A(2)(3)100	53	10	100	1,367	105	3
35	15	V/7343-20	T543V156(1)035A(2)(3)125	53	10	125	1,223	105	3
35	15	D-7343-31	T543D156(1)035A(2)(3)100	53	10	100	1,500	125	3
35	15	D-7343-31	T543D156(1)035A(2)(3)125	53	10	125	1,342	125	3
35	33	X/7343-43	T543X336(1)035A(2)(3)065	116	10	65	1,949	105	3
35	47	X/7343-43	T543X476(1)035A(2)(3)030	165	10	30	2,869	125	3
35	47	X/7343-43	T543X476(1)035A(2)(3)060	165	10	60	2,029	125	3
35	68	X/7343-43	T543X686M035A(2)(3)100	238	10	100	1,572	105	3
35	68	O/7360-43	T543O686M035A(2)(3)025	238	10	25	3,460	105	3
35	68	O/7360-43	T543O686M035A(2)(3)045	238	10	45	2,580	105	3
35	82	X/7343-43	T543X826M035A(2)(3)100	287	10	100	1,572	105	3
35	100	X/7343-43	T543X107M035A(2)(3)100	350	10	100	1,572	105	3
40	56	X/7343-43	T543X566M040A(2)(3)100	224	10	100	1,572	105	3
40	68	O/7360-43	T543O686M040A(2)(3)035	272	10	35	2,930	105	3
40	82	O/7360-43	T543O826M040A(2)(3)055	328	10	55	2,336	105	3
50	5.6	D-7343-31	T543D565(1)050A(2)(3)070	28	10	70	1,793	105	3
50	5.6	D-7343-31	T543D565(1)050A(2)(3)090	28	10	90	1,581	105	3
50	6.8	V/7343-20	T543V685(1)050A(2)(3)065	34	10	65	1,934	125	3
50	10	D-7343-31	T543D106(1)050A(2)(3)090	50	10	90	1,581	125	3
50	10	D-7343-31	T543D106(1)050A(2)(3)100	50	10	100	1,500	125	3
50	10	D-7343-31	T543D106(1)050A(2)(3)120	50	10	120	1,369	125	3
50	15	X/7343-43	T543X156(1)050A(2)(3)035	75	10	35	2,657	105	3
50	15	X/7343-43	T543X156(1)050A(2)(3)070	75	10	70	1,878	105	3
50	18	X/7343-43	T543X186(1)050A(2)(3)035	90	10	35	2,657	125	3
50	18	X/7343-43	T543X186(1)050A(2)(3)070	90	10	70	1,878	125	3
50	22	X/7343-43	T543X226(1)050A(2)(3)040	110	10	40	2,485	125	3
50	22	X/7343-43	T543X226(1)050A(2)(3)075	110	10	75	1,815	125	3
VDC at 105°C	µF	KEMET/EIA	(See below for part options)	µA at V_R, 25°C Maximum/ 5 Minutes	% at 25°C 120 Hz Maximum	mΩ at 25°C 100 kHz Maximum	(rms) mA at 45°C 100 kHz	°C	Reflow Temp ≤ 260°C
Rated Voltage	Rated Capacitance	Case Code/ Case Size	KEMET Part Number	DC Leakage	DF	ESR	Maximum Allowable Ripple Current	Maximum Operating Temp.	MSL

(1) To complete KEMET part number, insert M for ±20%, K for ±10%. Designates capacitance tolerance.
(2) To complete KEMET part number, H = Solder-plated, T = 100% Tin (Sn). Designates termination finish.
(3) To complete KEMET part number, insert E = None, S = 10 cycles +25°C, W = 10 cycles −55°C +85°C. Designates surge current option.
Refer to Ordering Information for additional detail.
Part Numbers marked in blue font are "Under Development." Engineering samples available upon request.

Table 1 – Ratings & Part Number Reference cont.

Rated Voltage VDC at 105°C	Rated Cap	Case Code/ Case Size	KEMET Part Number	DC Leakage	DF	ESR	Maximum Allowable Ripple Current	Maximum Operating Temp.	MSL
Not all parts are 105°C rated	µF	KEMET/EIA	(See below for part options)	µA at V_R, 25°C Maximum/ 5 Minutes	% at 25°C 120 Hz Maximum	mΩ at 25°C 100 kHz Maximum	(rms) mA at 45°C 100 kHz	°C	Reflow Temp ≤ 260°C
50	33	X/7343-43	T543X336(1)050A(2)(3)040	165	10	40	2,485	125	3
50	33	X/7343-43	T543X336(1)050A(2)(3)075	165	10	75	1,815	125	3
50	47	X/7343-43	T543X476M050A(2)(3)150	235	10	150	1,283	105	3
50	47	O/7360-43	T543O476M050A(2)(3)060	235	10	60	2,240	105	3
63	4.7	D-7343-31	T543D475(1)063A(2)(3)075	30	10	75	1,732	125	3
63	4.7	D-7343-31	T543D475(1)063A(2)(3)100	30	10	100	1,500	125	3
63	4.7	D-7343-31	T543D475(1)063A(2)(3)120	30	10	120	1,369	125	3
63	6.8	D-7343-31	T543D685(1)063A(2)(3)075	43	10	75	1,700	125	3
63	10	X/7343-43	T543X106(1)063A(2)(3)050	63	10	50	2,223	125	3
63	10	X/7343-43	T543X106(1)063A(2)(3)075	63	10	75	1,815	125	3
63	10	X/7343-43	T543X106(1)063A(2)(3)100	63	10	100	1,572	125	3
63	10	X/7343-43	T543X106(1)063A(2)(3)150	63	10	150	1,283	125	3
63	15	X/7343-43	T543X156(1)063A(2)(3)035	95	10	35	2,657	125	3
63	15	X/7343-43	T543X156(1)063A(2)(3)050	95	10	50	2,223	125	3
63	22	X/7343-43	T543X226(1)063A(2)(3)075	138.6	10	75	1,815	125	3
63	22	O/7360-43	T543O226M063A(2)(3)030	139	10	30	3,160	105	3
63	22	O/7360-43	T543O226M063A(2)(3)040	139	10	40	2,740	105	3
VDC at 105°C	µF	KEMET/EIA	(See below for part options)	µA at V_R, 25°C Maximum/ 5 Minutes	% at 25°C 120 Hz Maximum	mΩ at 25°C 100 kHz Maximum	(rms) mA at 45°C 100 kHz	°C	Reflow Temp ≤ 260°C
Rated Voltage	Rated Capacitance	Case Code/ Case Size	KEMET Part Number	DC Leakage	DF	ESR	Maximum Allowable Ripple Current	Maximum Operating Temp.	MSL

(1) To complete KEMET part number, insert M for ±20%, K for ±10%. Designates capacitance tolerance.
(2) To complete KEMET part number, H = Solder-plated, T = 100% Tin (Sn). Designates termination finish.
(3) To complete KEMET part number, insert E = None, S = 10 cycles +25°C, W = 10 cycles −55°C +85°C. Designates surge current option.
Refer to Ordering Information for additional detail.
Part Numbers marked in blue font are "Under Development." Engineering samples available upon request.

Derating Guidelines

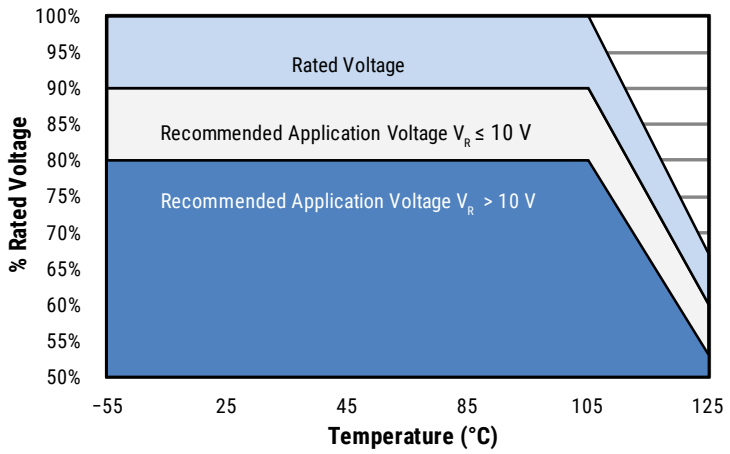

Recommended Application Voltage

KO-CAPs are solid state capacitors that demonstrate no wearout mechanism when operated within their recommended guidelines. While the KO-CAP can be operated at full rated voltage, most circuit designers seek a minimum level of assurance in long term reliability, which should be demonstrated with data. A voltage derating can provide the desired level of demonstrated reliability based on industry accepted acceleration models. Since most applications do require long term reliability, KEMET recommends that designers consider a voltage derating, according the graphic above, for the maximum steady state voltage.

Voltage Rating	Maximum Recommended Steady State Voltage
-55°C to 105°C	
$2.5\ V \leq V_R \leq 10\ V$	90% of V_R
$12.5\ V \leq V_R \leq 63\ V$	80% of V_R

V_R= Rated Voltage

Ripple Current/Ripple Voltage

Permissible AC ripple voltage and current are related to equivalent series resistance (ESR) and the power dissipation capabilities of the device. Permissible AC ripple voltage which may be applied is limited by two criteria:

1. The positive peak AC voltage plus the DC bias voltage, if any, must not exceed the DC voltage rating of the capacitor.
2. The negative peak AC voltage in combination with bias voltage, if any, must not exceed the allowable limits specified for reverse voltage. See the Reverse Voltage section for allowable limits.

The maximum power dissipation by case size can be determined using the table at right. The maximum power dissipation rating stated in the table must be reduced with increasing environmental operating temperatures. Refer to the table below for temperature compensation requirements.

Temperature Compensation Multipliers for Maximum Ripple Current		
T ≤ 45°C	45° C < T ≤ 85°C	85°C < T ≤ 125°C
1.00	0.70	0.25

T = Environmental temperature

The maximum power dissipation rating must be reduced with increasing environmental operating temperatures. Refer to the Temperature Compensation Multiplier table for details.

Case Code	EIA Case Code	Maximum Power Dissipation (Pmax) mWatts at 45°C with +30°C Rise
A	3216-18	112
B	3528-21	127
C	6032-28	165
D	7343-31	225
H	7360-20	187
L	6032-19	150
M	3528-15	120
O	7360-43	300
T	3528-12	105
U	6032-15	135
V	7343-20	187
W	7343-15	180
X	7343-43	247
Y	7343-40	241

Using the Pmax of the device, the maximum allowable rms ripple current or voltage may be determined.

$I(max) = \sqrt{Pmax/R}$
$E(max) = Z\sqrt{Pmax/R}$

I = rms ripple current (amperes)
E = rms ripple voltage (volts)
Pmax = maximum power dissipation (watts)
R = ESR at specified frequency (ohms)
Z = Impedance at specified frequency (ohms)

Surge Voltage

Surge voltage is the maximum voltage (peak value) which may be applied to the capacitor.
The surge voltage must not be applied for periodic charging and discharging in the course of normal operation and cannot be part of the application voltage.
Surge voltage capability is demonstrated by application of 1,000cycles at relevant voltage at 105°C and 125°C.
The parts are charged through a 33 Ohm resistor for 30 seconds and then discharged though a 33 Ohm resistor for each cycle.

Rated Voltage (V)	Surge Voltage (V)	Category Voltage (V)	Category Surge Voltage (V)
−55°C to 105°C		up to 125°C	
2.5	3.3	1.7	2.2
3	3.9	2.0	2.6
4	5.2	2.7	3.5
6.3	8.2	4.2	5.5
8	10.4	---	---
10	13	6.7	8.7
12.5	16.3	---	---
16	20.8	10.7	13.9
20	26	13.4	17.4
25	32.5	16.8	21.8
30	39	20.1	26.1
35	45.5	23.5	30.5
40	52		
50	65	33.5	43.6
63	81.9	42.2	54.9

Reverse Voltage

Polymer electrolytic capacitors are polar devices and may be permanently damaged or destroyed if connected in the wrong polarity. These devices will withstand a small degree of transient voltage reversal for short periods as shown in the below table.

Temperature	Permissible Transient Reverse Voltage
25°C	15% of rated voltage
55°C	10% of rated voltage
85°C	5% of rated voltage
105°C	3% of rated voltage
125°C*	1% of rated voltage

**For series rated to 125°C*

Table 2 – Land Dimensions/Courtyard

KEMET	Metric Size Code	Density Level A: Maximum (Most) Land Protrusion (mm)					Density Level B: Median (Nominal) Land Protrusion (mm)					Density Level C: Minimum (Least) Land Protrusion (mm)				
Case	EIA	W	L	S	V1	V2	W	L	S	V1	V2	W	L	S	V1	V2
A	3216–18	1.35	2.20	0.62	6.02	2.80	1.23	1.80	0.82	4.92	2.30	1.13	1.42	0.98	4.06	2.04
B	3528–21	2.35	2.21	0.92	6.32	4.00	2.23	1.80	1.12	5.22	3.50	2.13	1.42	1.28	4.36	3.24
C	6032–28	2.35	2.77	2.37	8.92	4.50	2.23	2.37	2.57	7.82	4.00	2.13	1.99	2.73	6.96	3.74
D	7343–31	2.55	2.77	3.67	10.22	5.60	2.43	2.37	3.87	9.12	5.10	2.33	1.99	4.03	8.26	4.84
L	6032-19	2.35	2.77	2.37	8.92	4.50	2.23	2.37	2.57	7.82	4.00	2.13	1.99	2.73	6.96	3.74
M	3528-15	2.35	2.20	0.92	6.32	4.00	2.23	1.80	1.12	5.22	3.50	2.13	1.42	1.28	4.36	3.24
O	7360-43	4.25	2.77	3.67	10.22	7.30	4.13	2.37	3.87	9.12	6.80	4.03	1.99	4.03	8.26	6.54
H	7360-20	4.25	2.77	3.67	10.22	7.30	4.13	2.37	3.87	9.12	6.80	4.03	1.99	4.03	8.26	6.54
T	3528–12	2.35	2.20	0.92	6.32	4.00	2.23	1.80	1.12	5.22	3.50	2.13	1.42	1.28	4.36	3.24
U	6032–15	2.35	2.77	2.37	8.92	4.50	2.23	2.37	2.57	7.82	4.00	2.13	1.99	2.73	6.96	3.74
V	7343–21	2.55	2.77	3.67	10.22	5.60	2.43	2.37	3.87	9.12	5.10	2.33	1.99	4.03	8.26	4.84
W	7343–15	2.55	2.77	3.67	10.22	5.60	2.43	2.37	3.87	9.12	5.10	2.33	1.99	4.03	8.26	4.84
X[1]	7343–43	2.55	2.77	3.67	10.22	5.60	2.43	2.37	3.87	9.12	5.10	2.33	1.99	4.03	8.26	4.84
Y[1]	7343–40	2.55	2.77	3.67	10.22	5.60	2.43	2.37	3.87	9.12	5.10	2.33	1.99	4.03	8.26	4.84

Density Level A: *For low-density product applications. Recommended for wave solder applications and provides a wider process window for reflow solder processes.*
Density Level B: *For products with a moderate level of component density. Provides a robust solder attachment condition for reflow solder processes.*
Density Level C: *For high component density product applications. Before adapting the minimum land pattern variations the user should perform qualification testing based on the conditions outlined in IPC standard 7351 (IPC–7351).*
[1] Height of these chips may create problems in wave soldering.
[2] Land pattern geometry is too small for silkscreen outline.

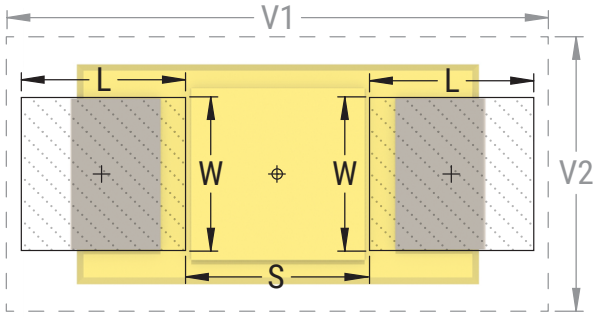

Grid Placement Courtyard

Soldering Process

The KEMET families of surface mount capacitors are compatible with wave (single or dual), convection, IR, or vapor phase reflow techniques. Preheating of these components is recommended to avoid extreme thermal stress. KEMET's recommended profile conditions for convection and IR reflow reflect the profile conditions of the IPC/J–STD–020D standard for moisture sensitivity testing. The devices can safely withstand a maximum of three reflow passes at these conditions.

Please note that although the X/7343–43 case size can withstand wave soldering, the tall profile (4.3 mm maximum) dictates care in wave process development.

Hand soldering should be performed with care due to the difficulty in process control. If performed, care should be taken to avoid contact of the soldering iron to the molded case. The iron should be used to heat the solder pad, applying solder between the pad and the termination, until reflow occurs. Once reflow occurs, the iron should be removed immediately. “Wiping” the edges of a chip and heating the top surface is not recommended.

During typical reflow operations, a slight darkening of the gold-colored epoxy may be observed. This slight darkening is normal and not harmful to the product. Marking permanency is not affected by this change.

Profile Feature	SnPb Assembly	Pb-Free Assembly
Preheat/Soak		
Temperature Minimum (T_{Smin})	100°C	150°C
Temperature Maximum (T_{Smax})	150°C	200°C
Time (t_s) from T_{smin} to T_{smax})	60 – 120 seconds	60 – 120 seconds
Ramp-up Rate (T_L to T_P)	3°C/second maximum	3°C/second maximum
Liquidous Temperature (T_L)	183°C	217°C
Time Above Liquidous (t_L)	60 – 150 seconds	60 – 150 seconds
Peak Temperature (T_P)	220°C* 235°C**	250°C* 260°C**
Time within 5°C of Maximum Peak Temperature (t_P)	20 seconds maximum	30 seconds maximum
Ramp-down Rate (T_P to T_L)	6°C/second maximum	6°C/second maximum
Time 25°C to Peak Temperature	6 minutes maximum	8 minutes maximum

Note: All temperatures refer to the center of the package, measured on the package body surface that is facing up during assembly reflow.
** For Case Size height > 2.5 mm*
*** For Case Size height ≤ 2.5 mm*

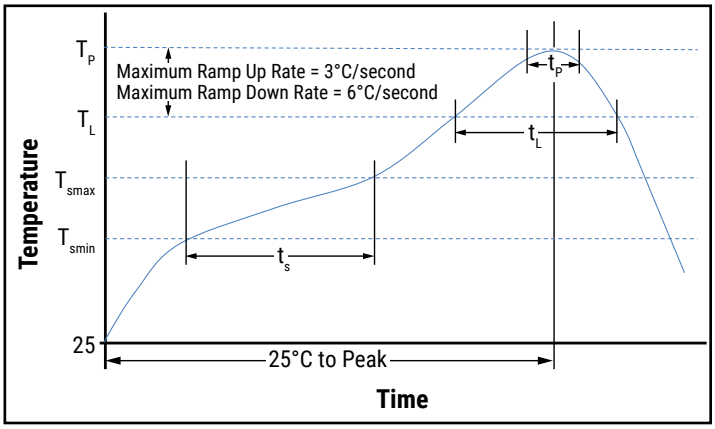

Storage

All KO-Cap are shipped in moisture barrier bags (MBBs) with desiccant and humidity indicator card (HIC). These parts are classified as moisture sensitivity level 3 (MSL3) or moisture sensitivity level 4 (MSL4) per IPC/JEDEC J-STD-020 and packaged per IPC/JEDEC J-STD-033. Refer to Table 1 for part type specification. MSL3 specifies a floor time of 168H at 30°C maximum temperature and 60% relative humidity. MSL4 specifies a floor time of 72H at 30°C maximum temperature and 60% relative humidity. Unused capacitors should be sealed in a MBB with fresh desiccant.

Calculated shelf life in sealed bag:
– 12 months from bag seal date in a storage environment of < 40°C and humidity < 90% RH
– 24 months from bag seal date in a storage environment of < 30°C and humidity < 70% RH

If baking is required, refer to IPC/JEDEC J–STD–033 for bake procedure

Construction

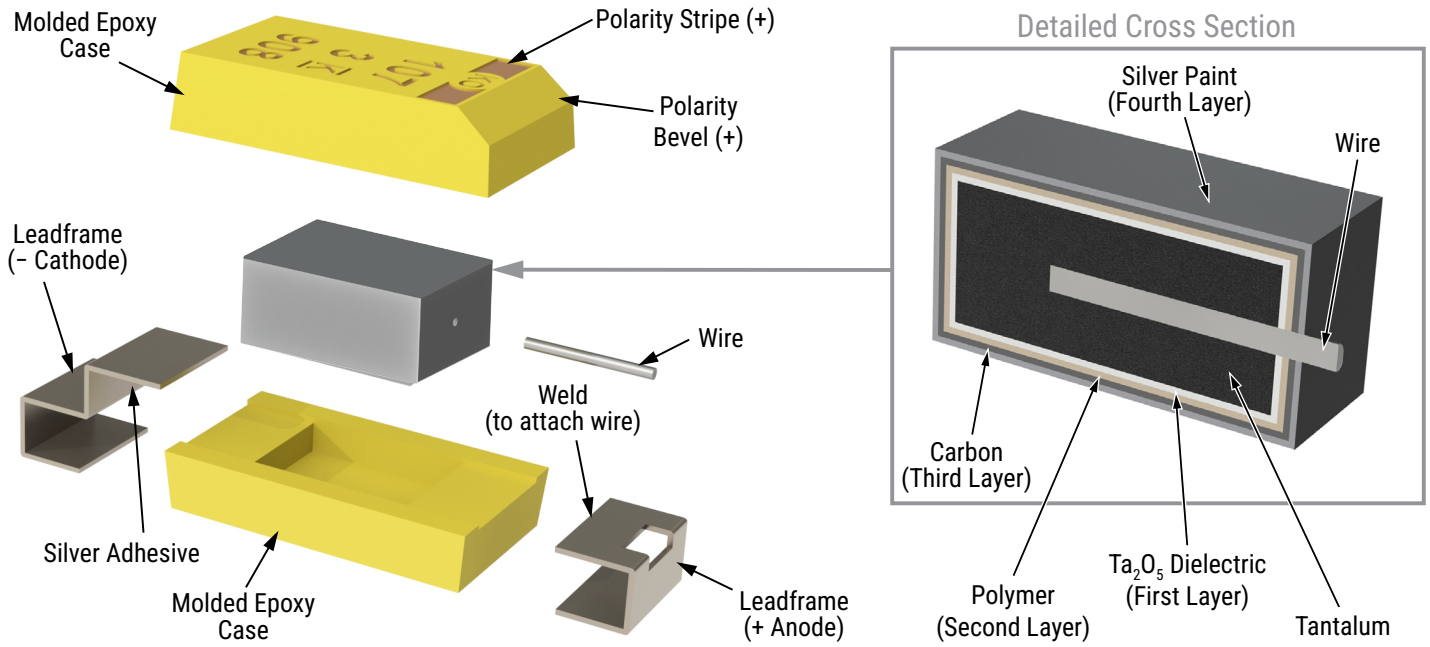

Capacitor Marking

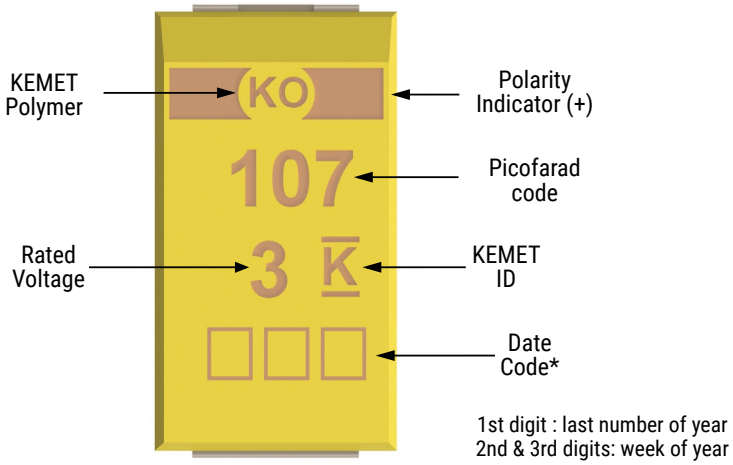

Tape & Reel Packaging Information

KEMET's molded chip capacitor families are packaged in 8 and 12 mm plastic tape on 7" and 13" reels in accordance with *EIA Standard 481*: Embossed Carrier Taping of Surface Mount Components for Automatic Handling. This packaging system is compatible with all tape-fed automatic pick-and-place systems.

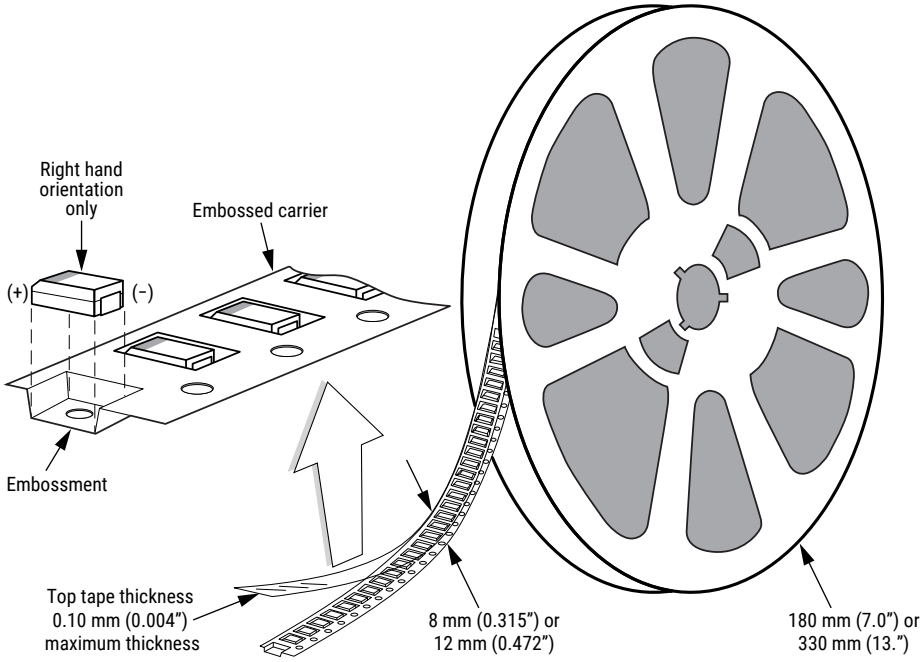

Table 3 – Packaging Quantity

Case Code		Tape Width (mm)	7" Reel*	13" Reel*
KEMET	EIA			
P	2012-10	8	3,000	N/A
R	2012-12	8	2,500	10,000
I	3216-10	8	3,000	N/A
S	3216-12	8	2,500	10,000
A	3216-18	8	2,000	N/A
T	3528-12	8	3,000	10,000
M	3528-15	8	2,500	8,000
B	3528-21	8	2,000	8,000
U	6032-15	12	1,000	5,000
L	6032-19	12	1,000	3,000
C	6032-28	12	500	3,000
Q	7343-12	12	1,000	3,000
W	7343-15	12	1,000	3,000
Z	7343-17	12	1,000	3,000
V	7343-19	12	1,000	3,000
D	7343-31	12	500	2,500
Y	7343-40	12	500	2,000
X	7343-43	12	500	2,000
J	7360-15	12	1,000	3,000
H	7360-20	12	1,000	3,000
O	7360-43	12	250	1,000

** No C-Spec required for 7" reel packaging. C-7280 required for 13" reel packaging.*

Figure 1 – Embossed (Plastic) Carrier Tape Dimensions

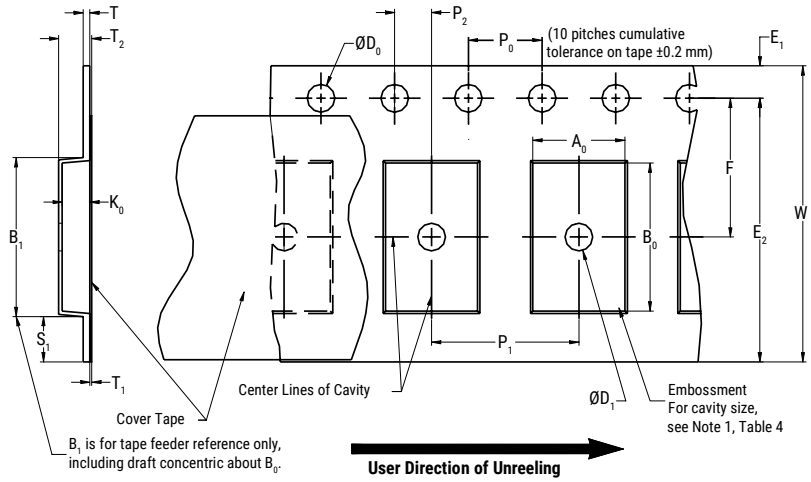

Table 4 – Embossed (Plastic) Carrier Tape Dimensions

Metric will govern

Constant Dimensions — Millimeters (Inches)									
Tape Size	D_0	D_1 Minimum Note 1	E_1	P_0	P_2	R Reference Note 2	S_1 Minimum Note 3	T Maximum	T_1 Maximum
8 mm	1.5 +0.10/−0.0 (0.059 +0.004/−0.0)	1.0 (0.039)	1.75 ±0.10 (0.069 ±0.004)	4.0 ±0.10 (0.157 ±0.004)	2.0 ±0.05 (0.079 ±0.002)	25.0 (0.984)	0.600 (0.024)	0.600 (0.024)	0.100 (0.004)
12 mm		1.5 (0.059)				30 (1.181)			

Variable Dimensions — Millimeters (Inches)								
Tape Size	Pitch	B_1 Maximum Note 4	E_2 Minimum	F	P_1	T_2 Maximum	W Maximum	A_0, B_0 & K_0
8 mm	Single (4 mm)	4.35 (0.171)	6.25 (0.246)	3.5 ±0.05 (0.138 ±0.002)	4.0 ±0.10 (0.157 ±0.004)	2.5 (0.098)	8.3 (0.327)	Note 5
12 mm	Single (4 mm) and Double (8 mm)	8.2 (0.323)	10.25 (0.404)	5.5 ±0.05 (0.217 ±0.002)	4.0 ±0.10 (0.157 ±0.004) or 8.0 ±0.10 (0.315 ±0.004)	4.6 (0.181)	12.3 (0.484)	

1. *The embossment hole location shall be measured from the sprocket hole controlling the location of the embossment. Dimensions of embossment location and hole location shall be applied independent of each other.*
2. *The tape, with or without components, shall pass around R without damage (see Figure 4).*
3. *If S_1 < 1.0 mm, there may not be enough area for cover tape to be properly applied (see EIA Standard 481–D, paragraph 4.3, section b).*
4. *B_1 dimension is a reference dimension for tape feeder clearance only.*
5. *The cavity defined by A_0, B_0 and K_0 shall surround the component with sufficient clearance that:*
   (a) the component does not protrude above the top surface of the carrier tape.
   (b) the component can be removed from the cavity in a vertical direction without mechanical restriction, after the top cover tape has been removed.
   (c) rotation of the component is limited to 20° maximum for 8 and 12 mm tapes (see Figure 2).
   (d) lateral movement of the component is restricted to 0.5 mm maximum for 8 mm and 12 mm wide tape (see Figure 3).
   (e) see Addendum in EIA Standard 481–D for standards relating to more precise taping requirements.

Packaging Information Performance Notes

1. Cover tape break force: 1.0 kg minimum.
2. Cover tape peel strength: The total peel strength of the cover tape from the carrier tape shall be:

Tape Width	Peel Strength
8 mm	0.1 to 1.0 newton (10 to 100 gf)
12 mm	0.1 to 1.3 newton (10 to 130 gf)

The direction of the pull shall be opposite the direction of the carrier tape travel. The pull angle of the carrier tape shall be 165° to 180° from the plane of the carrier tape. During peeling, the carrier and/or cover tape shall be pulled at a velocity of 300 ±10 mm/minute.
3. Labeling: Bar code labeling (standard or custom) shall be on the side of the reel opposite the sprocket holes. *Refer to EIA Standards 556 and 624*.

Figure 2 – Maximum Component Rotation

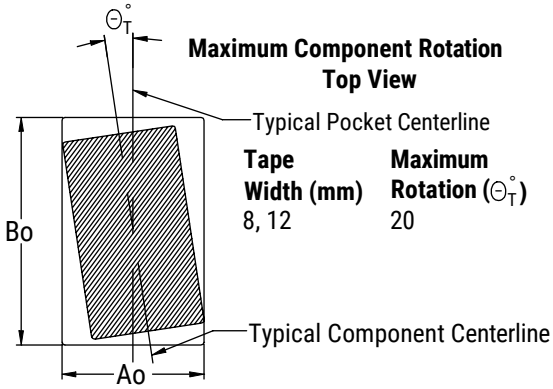

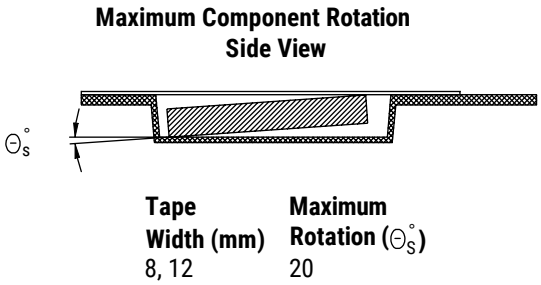

Figure 3 – Maximum Lateral Movement

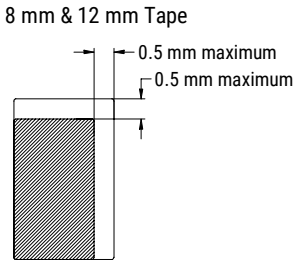

Figure 4 – Bending Radius

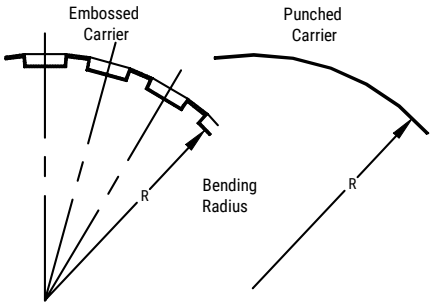

Figure 5 – Reel Dimensions

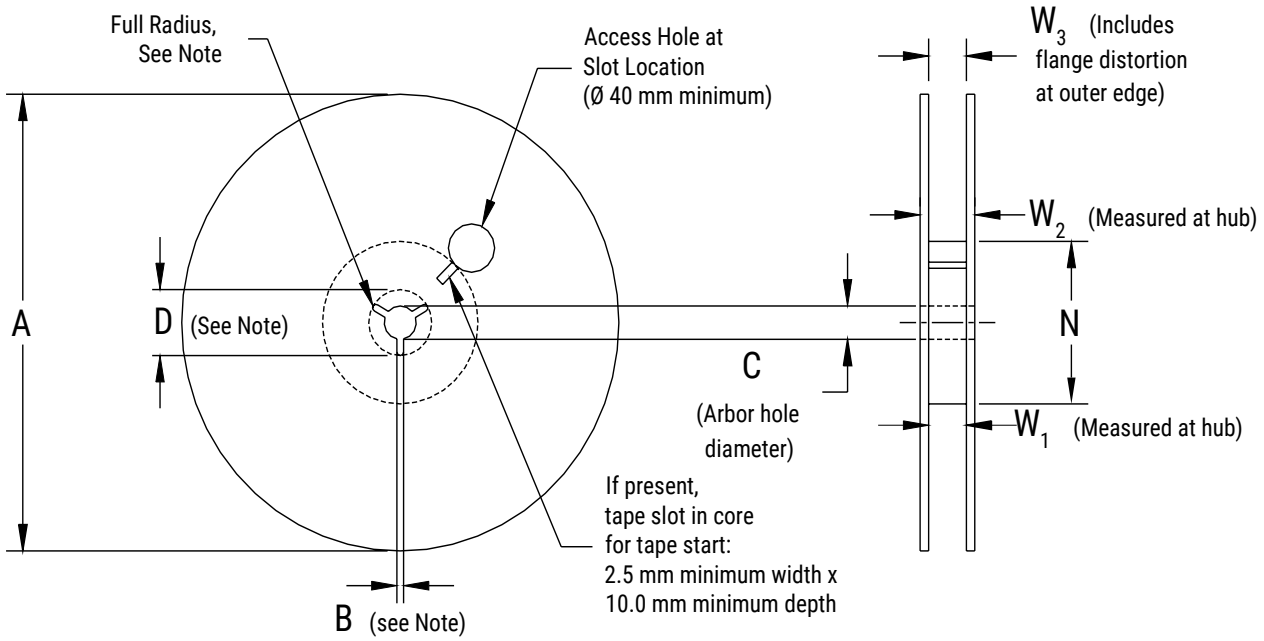

Note: Drive spokes optional; if used, dimensions B and D shall apply.

Table 5 – Reel Dimensions

Metric will govern

Constant Dimensions — Millimeters (Inches)				
Tape Size	A	B Minimum	C	D Minimum
8 mm	178 ±0.20 (7.008 ±0.008) or 330 ±0.20 (13.000 ±0.008)	1.5 (0.059)	13.0 +0.5/−0.2 (0.521 +0.02/−0.008)	20.2 (0.795)
12 mm				

Variable Dimensions — Millimeters (Inches)				
Tape Size	N Minimum	W_1	W_2 Maximum	W_3
8 mm	50 (1.969)	8.4 +1.5/−0.0 (0.331 +0.059/−0.0)	14.4 (0.567)	Shall accommodate tape width without interference
12 mm		12.4 +2.0/−0.0 (0.488 +0.078/−0.0)	18.4 (0.724)	

Figure 6 – Tape Leader & Trailer Dimensions

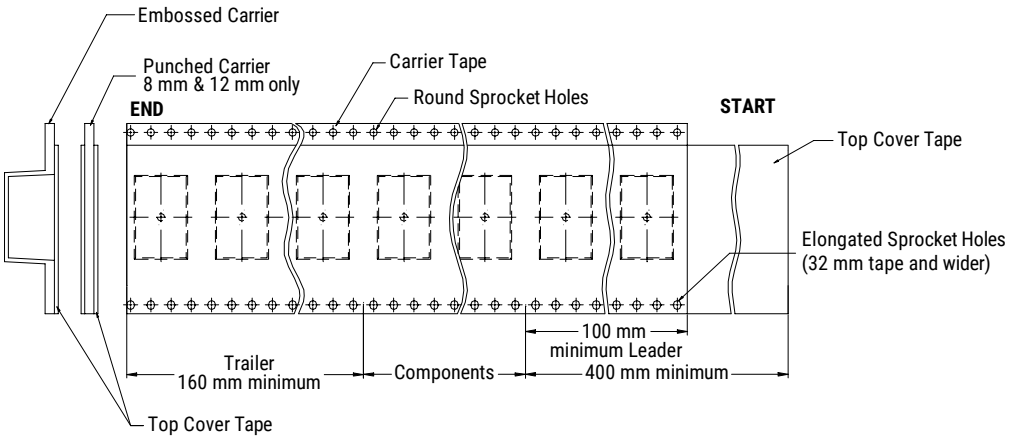

Figure 7 – Maximum Camber

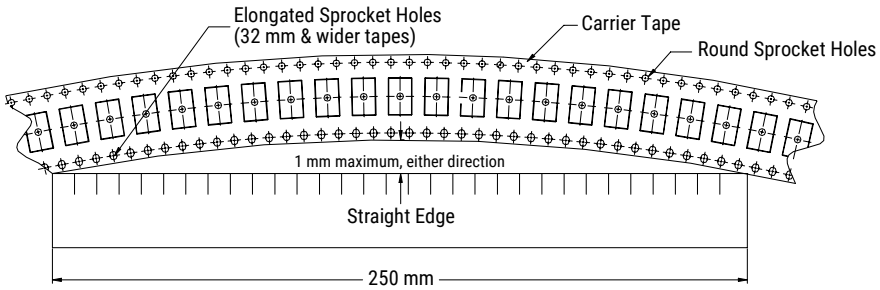

KEMET Electronics Corporation Sales Offices

For a complete list of our global sales offices, please visit https://www.yageogroup.com/SalesResources/SalesOffices

Disclaimer

All product specifications, statements, information and data (collectively, the "Information") in this datasheet are subject to change. The customer is responsible for checking and verifying the extent to which the Information contained in this publication is applicable to an order at the time the order is placed. All Information given herein is believed to be accurate and reliable, but it is presented without guarantee, warranty, or responsibility of any kind, expressed or implied.

Statements of suitability for certain applications are based on KEMET Electronics Corporation's ("KEMET") knowledge of typical operating conditions for such applications, but are not intended to constitute – and KEMET specifically disclaims – any warranty concerning suitability for a specific customer application or use. The Information is intended for use only by customers who have the requisite experience and capability to determine the correct products for their application. Any technical advice inferred from this Information or otherwise provided by KEMET with reference to the use of KEMET's products is given gratis, and KEMET assumes no obligation or liability for the advice given or results obtained.

Although KEMET designs and manufactures its products to the most stringent quality and safety standards, given the current state of the art, isolated component failures may still occur. Accordingly, customer applications which require a high degree of reliability or safety should employ suitable designs or other safeguards (such as installation of protective circuitry or redundancies) in order to ensure that the failure of an electrical component does not result in a risk of personal injury or property damage.

Although all product–related warnings, cautions and notes must be observed, the customer should not assume that all safety measures are indicated or that other measures may not be required.

KEMET is a registered trademark of KEMET Electronics Corporation.