Innovative Service Around the Globe YAGEO

DATA SHEET

ELECTROSTATIC DISCHARGE PROTECTION DEVICES

INDUSTRIAL / CONSUMER

SDD32CXXL01 SERIES

RoHS compliant & Halogen free

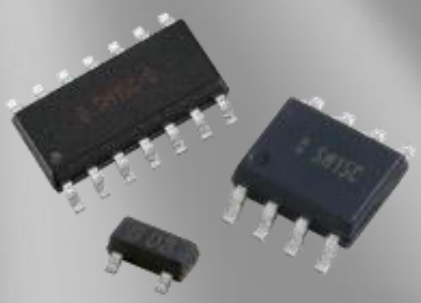



Product specification– June 30, 2023 V.5

Electrostatic Discharged Protection Devices (ESD) Data Sheet

Description

Brightking's SDD32CXXL01 series are designed to protect low voltage sensitive components from ESD and transient voltage events. Excellent clamping capability, low leakage, and fast response time, make these parts ideal for ESD protection on designs where board space is at a premium. Because of their small size, they are suited for use in cellular phones, portable devices, digital cameras, power supplies and many other portable applications.
They are designed to protect sensitive semiconductor components from damage or upset due to electrostatic discharge(ESD), electrical fast transients(EFT), and cable discharge events(CDE).



Contact : ±30kV
Air : ±30kV



Features

- IEC61000-4-2 ESD 30KV Air, 30KV contact compliance, ESD 15KV Air, 8KV contact compliance for SDD32C36L01
- SOD-323 surface mount package
- Protects bi-directional line
- Peak power dissipation of 320W under 8/20μs waveform
- Working voltage: 5V，8V，15V，18V， 24V，36V
- Low leakage current
- Low clamping voltage
- Solid-state silicon avalanche technology
- Lead Free/RoHS compliant
- Solder reflow temperature: Pure Tin-Sn, 260~270℃
- Flammability rating UL 94V-0
- Meets MSL level 1, per J-STD-020

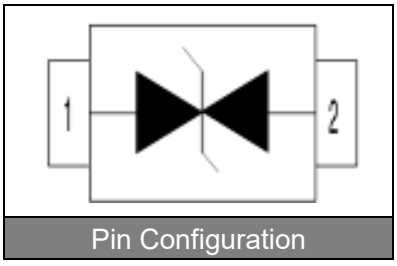

Pin Configuration

Applications

- Cellular handsets & Accessories
- Cordless phones
- Personal digital assistants (PDAs)
- Notebooks & Handhelds
- Portable instrumentation
- Digital cameras
- Peripherals

Maximum Ratings

Rating	Symbol	Value	Unit
Peak pulse power (tp=8/20μs waveform)	P_{PP}	320	W
ESD voltage (Contact discharge)	V_{ESD}	±30	kV
ESD voltage (Air discharge)		±30	
Storage & operating temperature range	T_{STG} ,T_J	-55~+150	℃

Electrical Characteristics (T_J=25℃)

SDD32C05L01 (Marking: 2B)

Parameter	Symbol	Condition	Min.	Typ.	Max.	Unit
Reverse stand-off voltage	V_{RWM}				5	V
Reverse breakdown voltage	V_{BR}	I_{BR}=1mA	6			V
Reverse leakage current	I_R	V_R=5V			1	μA
Clamping voltage (tp=8/20μs)	V_C	I_{PP}=1A			9.8	V
Clamping voltage (tp=8/20μs)	V_C	I_{PP}=10A		15		V
Peak Pulse Current(tp=8/20μs)	I_{PP}				19	A
Off state junction capacitance	C_J	0Vdc,f=1MHz		100		pF

SDD32C08L01 (Marking: 2P)

Parameter	Symbol	Condition	Min.	Typ.	Max.	Unit
Reverse stand-off voltage	V_{RWM}				8	V
Reverse breakdown voltage	V_{BR}	I_{BR}=1mA	8.5			V
Reverse leakage current	I_R	V_R=8V			1	μA
Clamping voltage (tp=8/20μs)	V_C	I_{PP}=1A		10		V
Clamping voltage (tp=8/20μs)	V_C	I_{PP}=10A			20	V
Peak Pulse Current(tp=8/20μs)	I_{PP}				28	A
Off state junction capacitance	C_J	0Vdc,f=1MHz		90		pF

SDD32C15L01 (Marking: 2N)

Parameter	Symbol	Condition	Min.	Typ.	Max.	Unit
Reverse stand-off voltage	V_{RWM}				15	V
Reverse breakdown voltage	V_{BR}	I_{BR}=1mA	16.7			V
Reverse leakage current	I_R	V_R=15V			1	μA
Clamping voltage (tp=8/20μs)	V_C	I_{PP}=8A		30		V
Peak Pulse Current(tp=8/20μs)	I_{PP}				8	A
Off state junction capacitance	C_J	0Vdc,f=1MHz		35		pF

SDD32C18L01 (Marking: 2K)

Parameter	Symbol	Condition	Min.	Typ.	Max.	Unit
Reverse stand-off voltage	V_{RWM}				18	V
Reverse breakdown voltage	V_{BR}	I_{BR}=1mA	20			V
Reverse leakage current	I_R	V_R=18V			1	μA
Clamping voltage (tp=8/20μs)	V_C	I_{PP}=1A			29	V
Clamping voltage (tp=8/20μs)	V_C	I_{PP}=5A			40	V
Peak Pulse Current(tp=8/20μs)	I_{PP}				5	A
Off state junction capacitance	C_J	0Vdc,f=1MHz		40		pF

SDD32C24L01 (Marking: 2H)

Parameter	Symbol	Condition	Min.	Typ.	Max.	Unit
Reverse stand-off voltage	V_{RWM}				24	V
Reverse breakdown voltage	V_{BR}	I_{BR}=1mA	26.7			V
Reverse leakage current	I_R	V_R=24V			1	μA
Clamping voltage (tp=8/20μs)	V_C	I_{PP}=1A			43	V
Clamping voltage (tp=8/20μs)	V_C	I_{PP}=5A			56	V
Peak Pulse Current(tp=8/20μs)	I_{PP}				5	A
Off state junction capacitance	C_J	0Vdc,f=1MHz		37		pF

SDD32C36L01 (Marking: 36C)

Parameter	Symbol	Condition	Min.	Typ.	Max.	Unit
Reverse stand-off voltage	V_{RWM}				36	V
Reverse breakdown voltage	V_{BR}	I_{BR}=1mA	40			V
Reverse leakage current	I_R	V_R=36V			1	μA
Clamping voltage (tp=8/20μs)	V_C	I_{PP}=1A			56	V
Clamping voltage (tp=8/20μs)	V_C	I_{PP}=5A			75	V
Peak Pulse Current(tp=8/20μs)	I_{PP}				5	A
Off state junction capacitance	C_J	0Vdc,f=1MHz		30		pF

Typical Characteristics Curves

Figure 1. Power Derating Curve

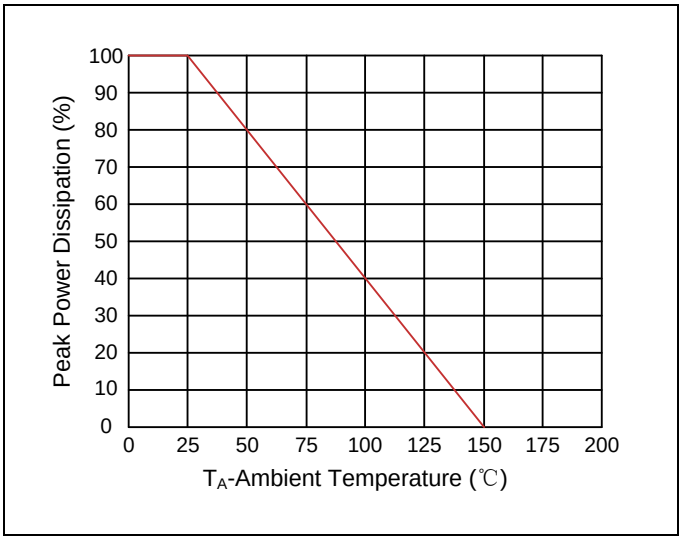

Figure 2. Pulse Waveform

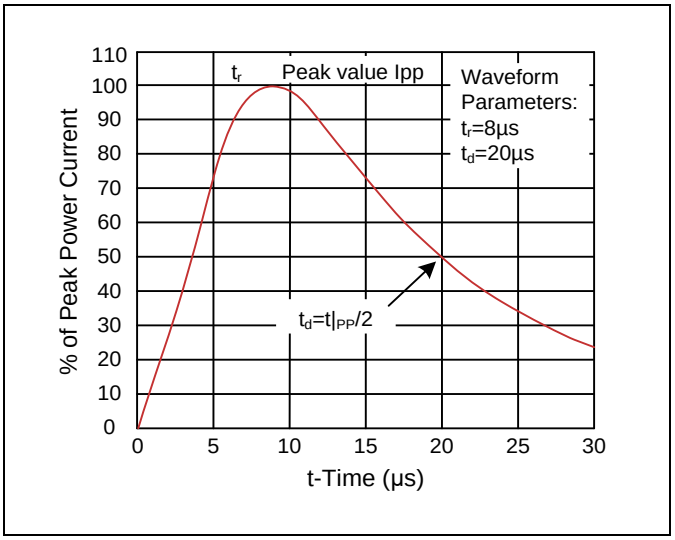

Figure 3. Capacitance vs. Reverse Voltage

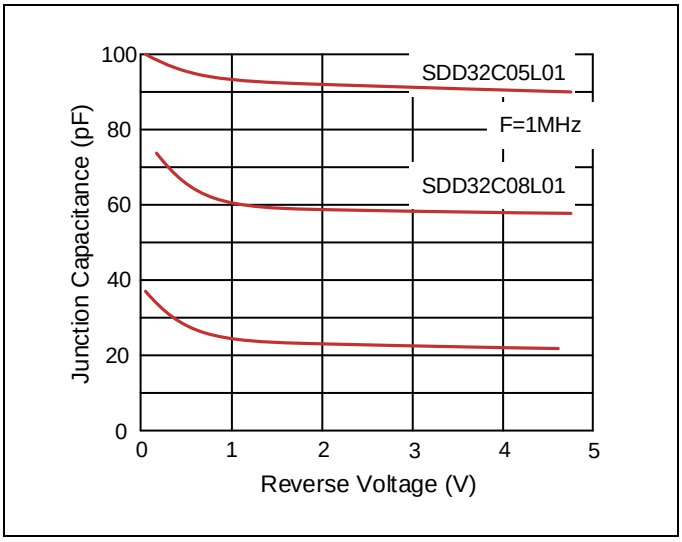

Recommended Soldering Conditions

Reflow Soldering

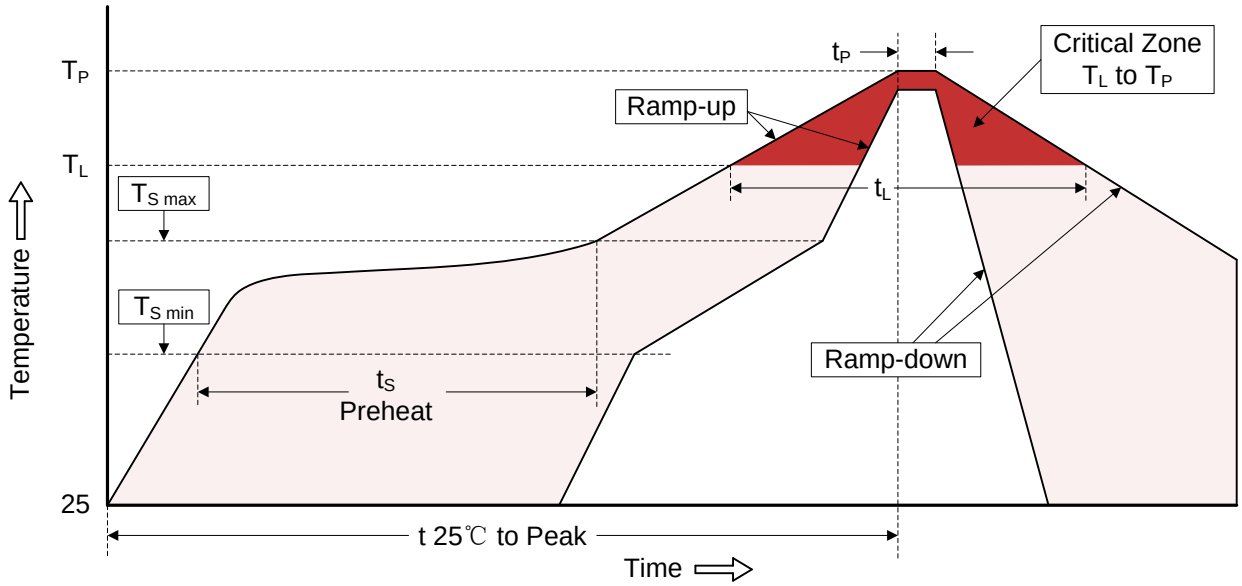

Recommended Condition

Profile Feature	Pb-Free Assembly
Average ramp-up rate (T_L to T_P)	3℃/second max.
Preheat -Temperature Min ($T_{S\ min}$) -Temperature Max ($T_{S\ max}$) -Time (min to max) (ts)	 150℃ 200℃ 60-180 seconds
$T_{S\ max}$ to T_L -Ramp-up Rate	3℃/second max.
Time maintained above: -Temperature (T_L) -Time (t_L)	 217℃ 60-150 seconds
Peak Temperature (T_P)	260℃
Time within 5℃ of actual Peak Temperature (t_P)	20-40 seconds
Ramp-down Rate	6℃/second max.
Time 25℃ to Peak Temperature	8 minutes max.

Dimensions (SOD-323)

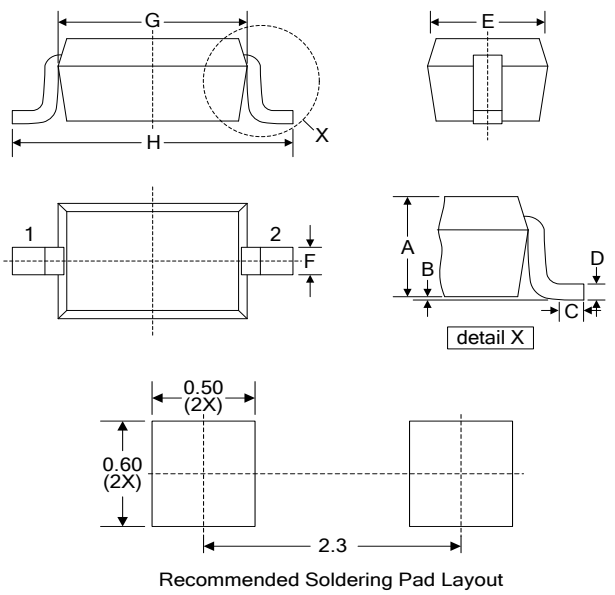

Recommended Soldering Pad Layout

Symbol	Dimension			
	Millimeters		Inches	
	Min.	Max.	Min.	Max.
A	0.80	1.10	0.031	0.043
B	-	0.10	-	0.004
C	0.20	-	0.008	-
D	0.11	0.20	0.004	0.008
E	1.15	1.35	0.045	0.053
F	-	0.35	-	0.014
G	1.60	1.80	0.063	0.071
H	2.40	2.70	0.094	0.102

Packaging

Tape

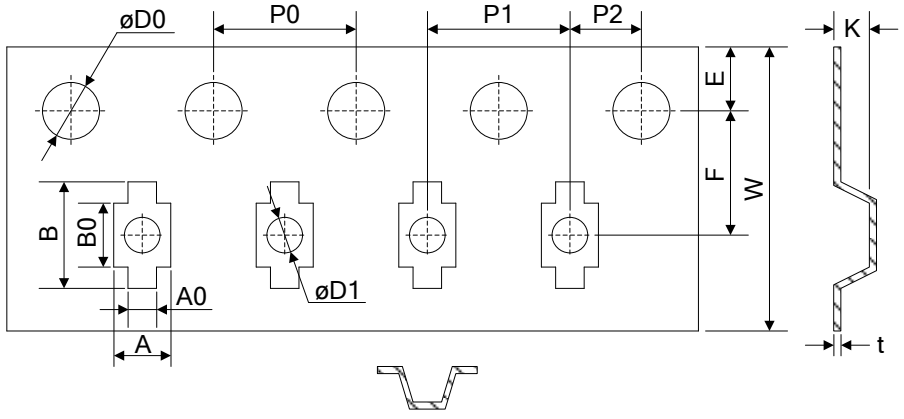

Symbol	Dimension (mm)
W	8.00±0.30
P0	4.00±0.10
P1	4.00±0.10
P2	2.00±0.10
D0	Φ1.55±0.10
D1	Φ1.00±0.05
E	1.75±0.10
F	3.50±0.10
A	1.48±0.10
A0	0.80±0.10
B	3.00±0.10
B0	1.80±0.10
K	1.05±0.10
t	0.25±0.05

Reel

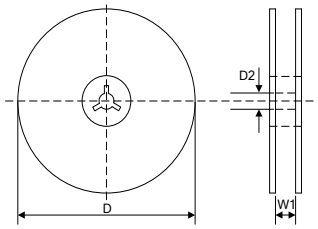

D	Φ178.0±2.0
D2	Φ13.0
W1	9.5
Quantity: 3000PCS	

LEGAL DISCLAIMER

YAGEO, its distributors and agents (collectively, “YAGEO”), hereby disclaims any and all liabilities for any errors, inaccuracies or incompleteness contained in any product related information, including but not limited to product specifications, datasheets, pictures and/or graphics. YAGEO may make changes, modifications and/or improvements to product related information at any time and without notice.

YAGEO makes no representation, warranty, and/or guarantee about the fitness of its products for any particular purpose or the continuing production of any of its products. To the maximum extent permitted by law, YAGEO disclaims (i) any and all liability arising out of the application or use of any YAGEO product, (ii) any and all liability, including without limitation special, consequential or incidental damages, and (iii) any and all implied warranties, including warranties of fitness for a particular purpose, non -infringement and merchantability.

YAGEO products are designed for general purpose applications under normal operation and usage conditions. Please contact YAGEO for the applications listed below which require especially high reliability for the prevention of defects which might directly cause damage to the third party's life, body or property: Aerospace equipment (artificial satellite, rocket, etc.), Atomic energy-related equipment, Aviation equipment, Disaster prevention equipment, crime prevention equipment, Electric heating apparatus, burning equipment, Highly public information network equipment, data-processing equipment , Medical devices, Military equipment, Power generation control equipment, Safety equipment, Traffic signal equipment, Transportation equipment and Undersea equipment, or for any other application or use in which the failure of YAGEO products could result in personal injury or death, or serious property damage. Particularly **YAGEO Corporation and its affiliates do not recommend the use of commercial, automotive, and/or COTS grade products for high reliability applications or manned space flight.**

Information provided here is intended to indicate product specifications only. YAGEO reserves all the rights for revising this content without further notification, as long as products are unchanged. Any product change will be announced by PCN.