Innovative Service Around the Globe YAGEO

DATA SHEET

ELECTROSTATIC DISCHARGE PROTECTION DEVICES

INDUSTRIAL / CONSUMER

SSD8A12L01

RoHS compliant & Halogen free

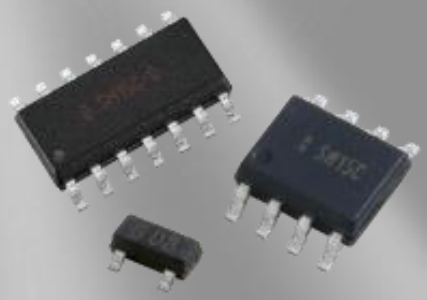



Product specification– July 02, 2023 V.1

ElectroStatic Discharged Protection Devices (ESD) Data Sheet

Description



Contact : ±30kV
Air : ±30kV



The SSD8A12L01 is designed to protect voltage sensitive components from ESD and transient voltage events. Excellent clamping capability, low leakage, and fast response time, make these parts ideal for ESD protection on designs where board space is at a premium. Because of its small size, it is suited for use in cellular phones, portable devices, digital cameras, power supplies and many other portable applications. It is designed to protect sensitive semiconductor components from damage or upset due to electrostatic discharge(ESD), electrical fast transients(EFT), and cable discharge events(CDE).

Features

- IEC61000-4-2 ESD 30KV Air, 30KV contact compliance
- SOD882 surface mount package
- Working voltage: 12V
- Low leakage current
- Low operating and clamping voltages
- Lead Free/RoHS compliant
- Flammability rating UL 94V-0
- Meets MSL level 1, per J-STD-020
- Marking: 12A

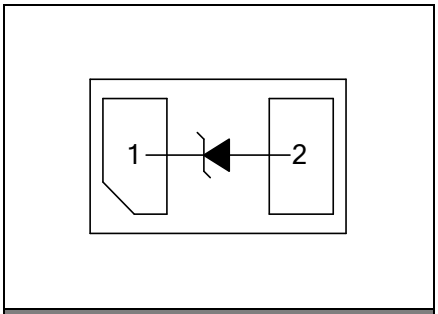

Pin Configuration

Applications

- USB 3.0/USB 2.0
- MHL/MIPI/MDDI
- HDMI, Video Port, eSATA
- Set Top Boxes, Game Consoles
- Smart Phones
- External Storage
- Ultrabooks, Notebooks
- Tablets, eReaders

Maximum Ratings

Rating	Symbol	Value	Unit
Peak pulse power (tp=8/20μs waveform)	Ppp	1900	W
ESD voltage (Contact discharge)	V_{ESD}	±30	kV
ESD voltage (Air discharge)		±30	
Storage & operating temperature range	T_{STG} ,T_J	-55~+150	℃

Electrical Characteristics (T_J=25℃)

Parameter	Symbol	Condition	Min.	Typ.	Max.	Unit
Reverse stand-off voltage	V_{RWM}				12	V
Reverse breakdown voltage	V_{BR}	I_{BR}=1.0mA	13.3			V
Reverse leakage current	I_R	V_R=12V			1.0	μA
Clamping voltage (tp=8/20μs)	V_C	I_{PP}=45A		35	45	V
Peak Pulse Current(tp=8/20μs)	I_{PP}				45	A
ESD Clamping voltage (TLP)	V_C	I_{PP}=8.0A		15		V
ESD Clamping voltage (TLP)	V_C	I_{PP}=16A		19		V
ESD Dynamic Turn-on Resistance	$R_{dynamic}$			0.5		Ω
Off state junction capacitance	C_J	0Vdc,f=1MHz		100	120	pF

Typical Characteristics Curves

Figure 1. Pulse Waveforms

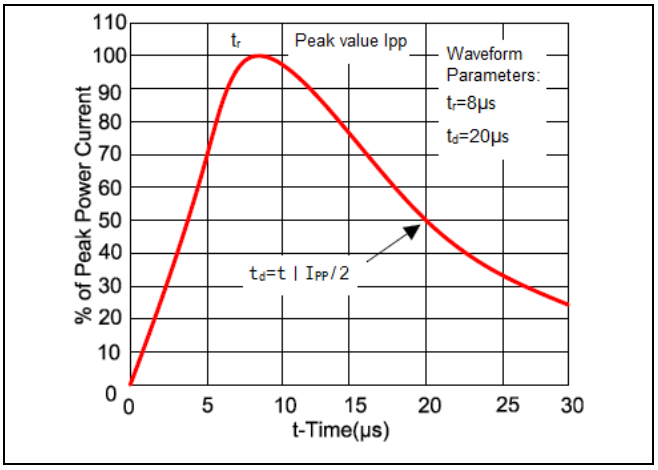

Figure 2. Clamping Voltage vs. Peak Pulse Current

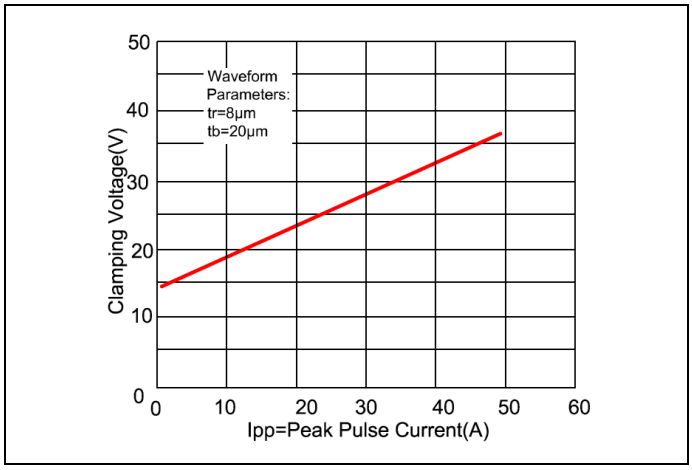

Figure 3. Capacitance vs. Reverse Voltage

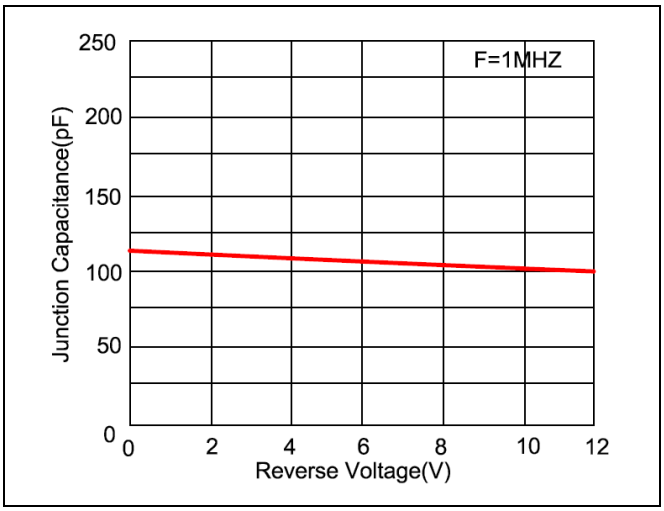

Figure 4.Transmission LinePulsing (TLP) Measurement

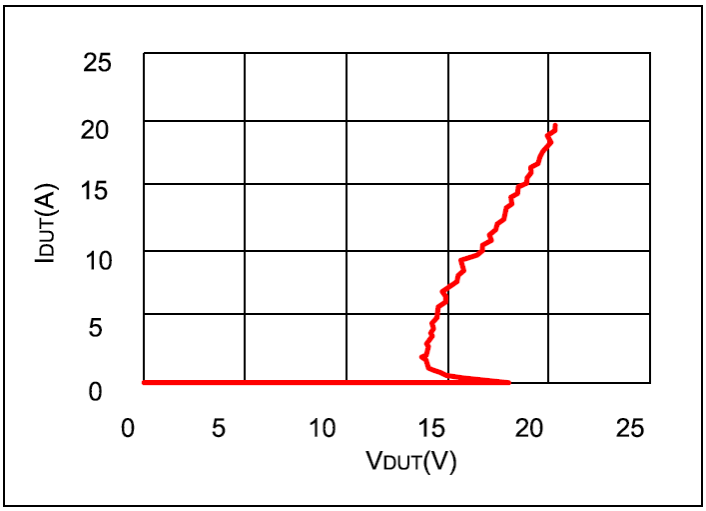

Recommended Soldering Conditions

Reflow Soldering

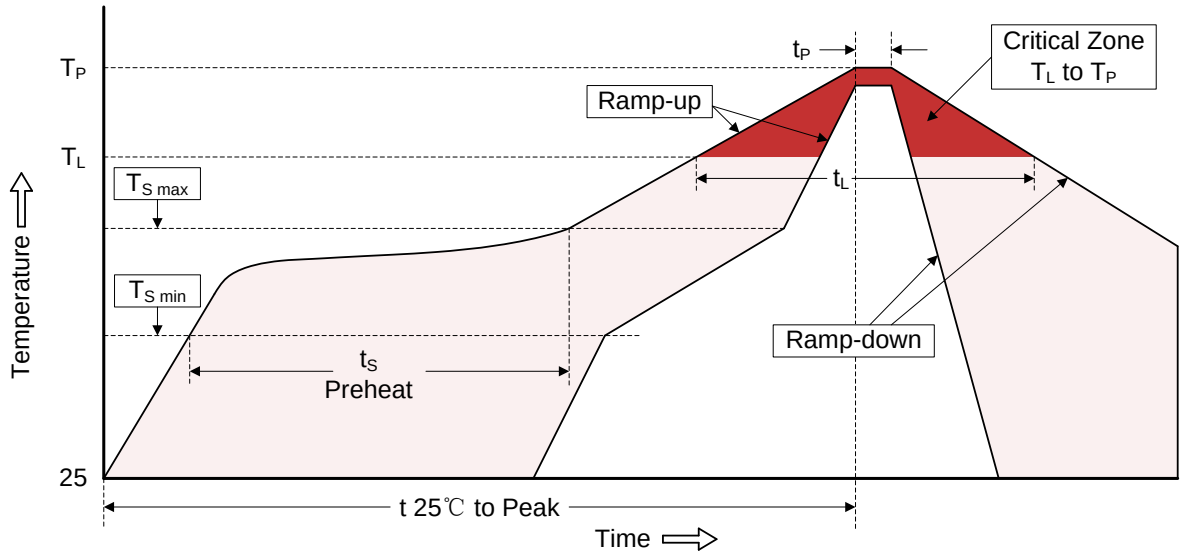

Recommended Conditions

Profile Feature	Pb-Free Assembly
Average ramp-up rate (T_L to T_P)	3℃/second max.
Preheat -Temperature Min ($T_{S\ min}$) -Temperature Max ($T_{S\ max}$) -Time (min to max) (t_S)	 150℃ 200℃ 60-180 seconds
$T_{S\ max}$ to T_L -Ramp-up Rate	 3℃/second max.
Time maintained above: -Temperature (T_L) -Time (t_L)	 217℃ 60-150 seconds
Peak Temperature (T_P)	260℃
Time within 5℃ of actual Peak Temperature (t_P)	20-40 seconds
Ramp-down Rate	6℃/second max.
Time 25℃ to Peak Temperature	8 minutes max.

Dimensions (SOD882)

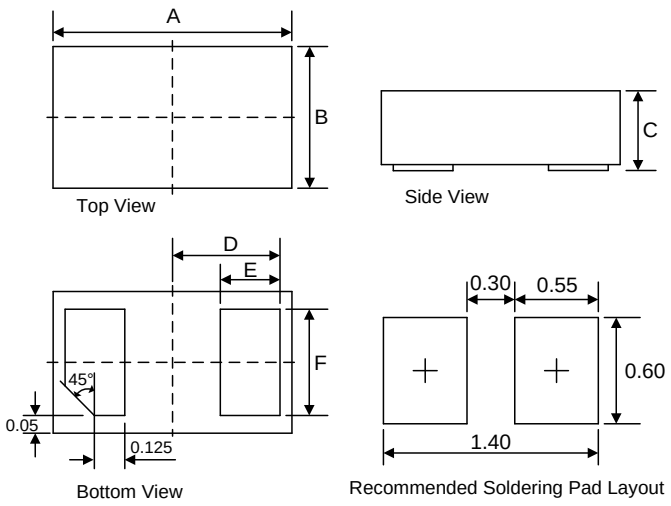

Symbol	Dimension (mm)			
	Millimeters		Inches	
	Min.	Max.	Min.	Max.
A	0.95	1.05	0.037	0.041
B	0.55	0.65	0.022	0.026
C	0.32	0.55	0.013	0.022
D	0.45		0.018	
E	0.20	0.30	0.008	0.012
F	0.45	0.55	0.018	0.022

Packaging

Tape

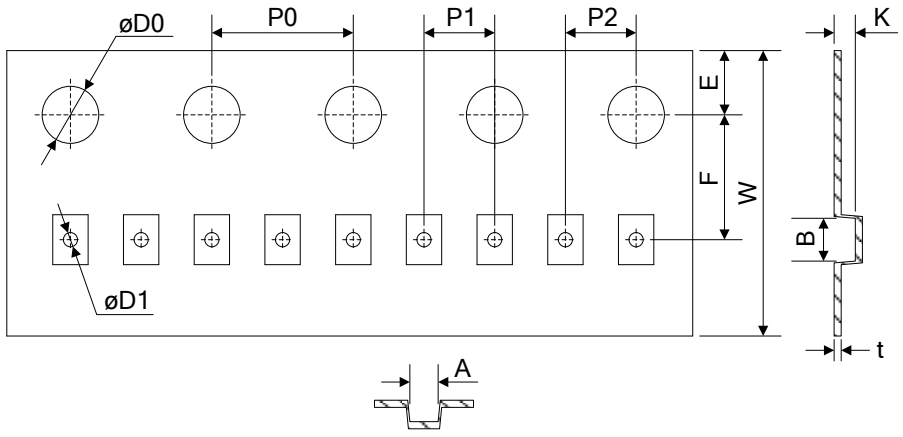

Symbol	Dimension (mm)
W	8.00±0.30
P0	4.00±0.10
P1	2.00±0.10
P2	2.00±0.10
D0	Φ1.55±0.10
D1	Φ0.40±0.05
E	1.75±0.10
F	3.50±0.10
A	0.75±0.10
B	1.15±0.10
K	0.60±0.05
t	0.20±0.05

Reel

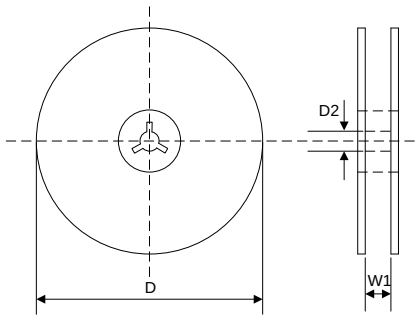

D	Φ178.0±2.0
D2	Φ13.00.
W1	9.50
Quantity: 10000PCS	

LEGAL DISCLAIMER

YAGEO, its distributors and agents (collectively, "YAGEO"), hereby disclaims any and all liabilities for any errors, inaccuracies or incompleteness contained in any product related information, including but not limited to product specifications, datasheets, pictures and/or graphics. YAGEO may make changes, modifications and/or improvements to product related information at any time and without notice.

YAGEO makes no representation, warranty, and/or guarantee about the fitness of its products for any particular purpose or the continuing production of any of its products. To the maximum extent permitted by law, YAGEO disclaims (i) any and all liability arising out of the application or use of any YAGEO product, (ii) any and all liability, including without limitation special, consequential or incidental damages, and (iii) any and all implied warranties, including warranties of fitness for a particular purpose, non -infringement and merchantability.

YAGEO products are designed for general purpose applications under normal operation and usage conditions. Please contact YAGEO for the applications listed below which require especially high reliability for the prevention of defects which might directly cause damage to the third party's life, body or property: Aerospace equipment (artificial satellite, rocket, etc.), Atomic energy-related equipment, Aviation equipment, Disaster prevention equipment, crime prevention equipment, Electric heating apparatus, burning equipment, Highly public information network equipment, data-processing equipment , Medical devices, Military equipment, Power generation control equipment, Safety equipment, Traffic signal equipment, Transportation equipment and Undersea equipment, or for any other application or use in which the failure of YAGEO products could result in personal injury or death, or serious property damage. Particularly **YAGEO Corporation and its affiliates do not recommend the use of commercial or automotive grade products for high reliability applications or manned space flight.**

Information provided here is intended to indicate product specifications only. YAGEO reserves all the rights for revising this content without further notification, as long as products are unchanged. Any product change will be announced by PCN.