Innovative Service Around the Globe YAGEO

DATA SHEET

ELECTROSTATIC DISCHARGE PROTECTION DEVICES

INDUSTRIAL / CONSUMER

UAT52A05L02

RoHS compliant & Halogen free

Product specification– July 17, 2025 V.3

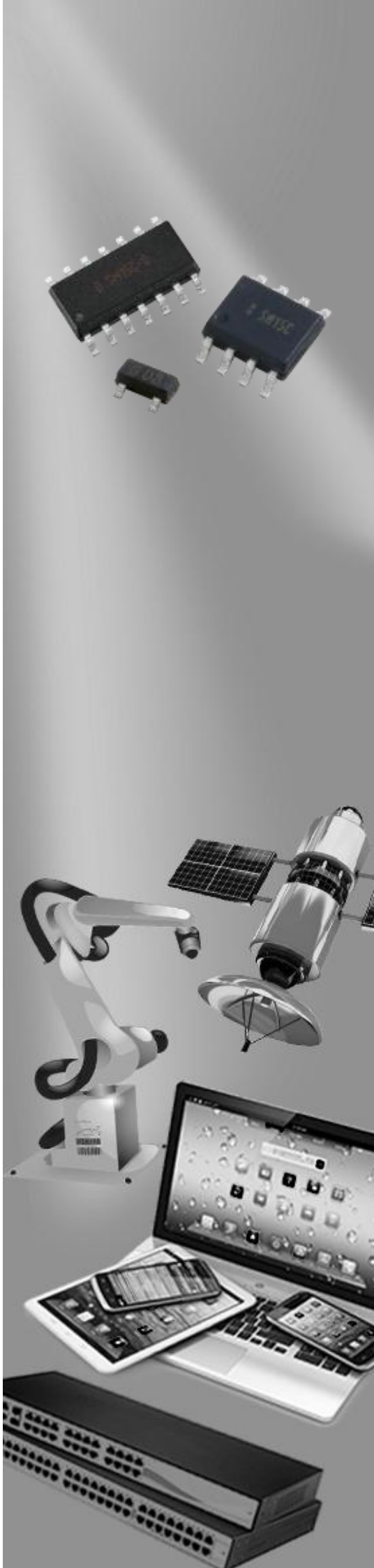

Electrostatic Discharged Protection Devices (ESD) Data Sheet

Description

This is ultra-low capacitance TVS arrays designed to protect high speed data interfaces. It has been specifically designed to protect sensitive components which are connected to high-speed data and transmission lines from overvoltage caused by electrostatic (ESD), cable discharge events (CDE) and electrical fast transients (EFT).



Features

- IEC61000-4-2 ESD 15KV Air, 8KV contact compliance
- SOT-523 surface mount package
- Protects two high speed data lines
- Working voltage: 5V
- Ultra-low capacitance and clamping voltages
- Low leakage current
- Solid-state silicon avalanche technology
- Lead Free/RoHS compliant
- Solder reflow temperature: Pure Tin-Sn, 260~270℃
- Flammability rating UL 94V-0
- Meets MSL level 1, per J-STD-020
- Marking: 5M5U

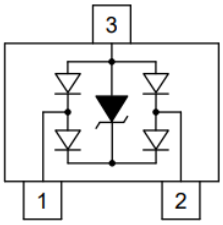

Pin Configuration

Applications

- HDMI interface protection
- Mobile display digital interface
- RF/Antenna circuits
- USB 2.0 & Firewire ports
- GaAs photodetector protection
- HBT power Amp protection
- Infiniband transceiver protection

Maximum Ratings

Rating	Symbol	Value	Unit
ESD voltage (Contact discharge)	V_{ESD}	±8	kV
ESD voltage (Air discharge)		±15	
Storage & operating temperature range	T_{STG} ,T_J	-55~+150	℃

Electrical Characteristics (T_J=25℃)

Parameter	Symbol	Condition	Min.	Typ.	Max.	Unit
Reverse stand-off voltage	V_{RWM}				5	V
Reverse breakdown voltage	V_{BR}	I_{BR}=1mA	6			V
Reverse leakage current	I_R	V_R=5V Each I/O pin			0.5	μA
Clamping voltage (tp=8/20μs)	V_C	I_{PP}=1A			9.8	V
Clamping voltage (tp=8/20μs)	V_C	I_{PP}=3A			15	V
Peak pulse current (tp=8/20μs)	I_{PP}				3	A
Off state junction capacitance	C_J	0Vdc,f=1MHz Between I/O pins and GND		0.8		pF
Off state junction capacitance	C_J	0Vdc,f=1MHz Between I/O pins		0.4		pF

Typical Characteristics Curves

Figure 1. Pulse Waveforms

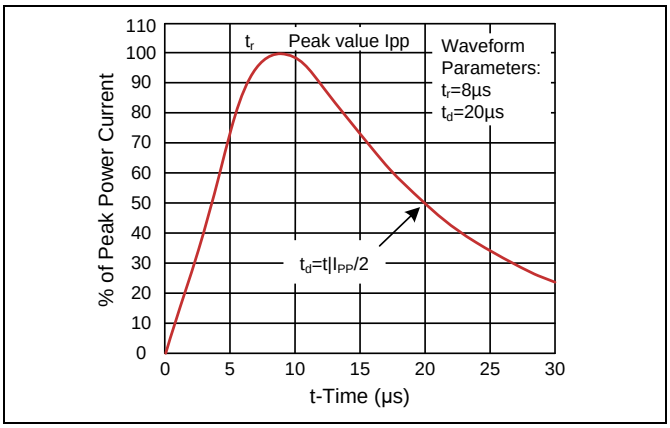

Figure 2. Capacitance vs. Reverse Voltage

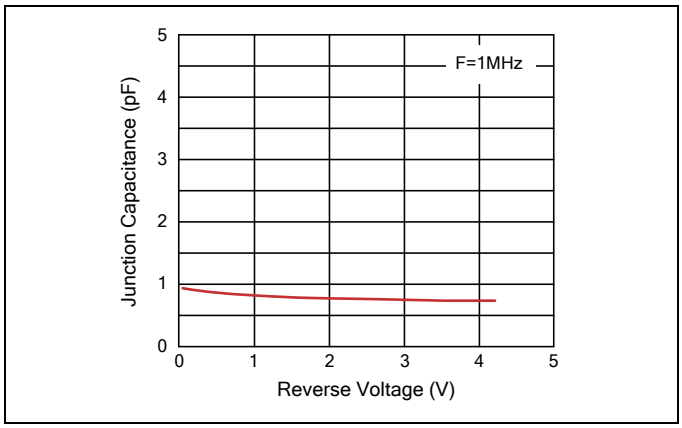

Figure 3. Clamping Voltage vs. Peak Pulse Current

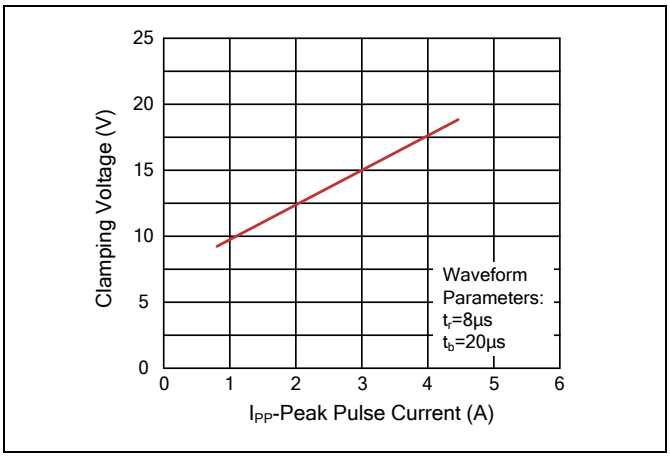

Recommended Soldering Conditions

Reflow Soldering

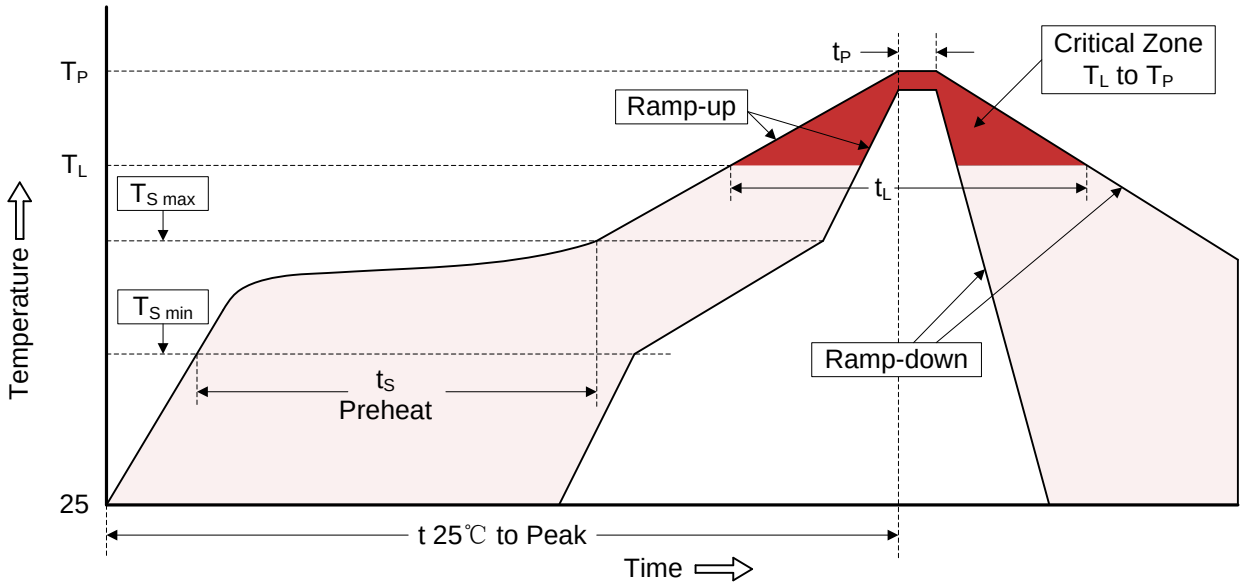

Recommended Conditions

Profile Feature	Pb-Free Assembly
Average ramp-up rate (T_L to T_P)	3℃/second max.
Preheat -Temperature Min ($T_{S\ min}$) -Temperature Max ($T_{S\ max}$) -Time (min to max) (ts)	150℃ 200℃ 60-180 seconds
$T_{S\ max}$ to T_L -Ramp-up Rate	3℃/second max.
Time maintained above: -Temperature (T_L) -Time (t_L)	217℃ 60-150 seconds
Peak Temperature (T_P)	260℃
Time within 5℃ of actual Peak Temperature (t_P)	20-40 seconds
Ramp-down Rate	6℃/second max.
Time 25℃ to Peak Temperature	8 minutes max.

Dimensions（SOT-523）

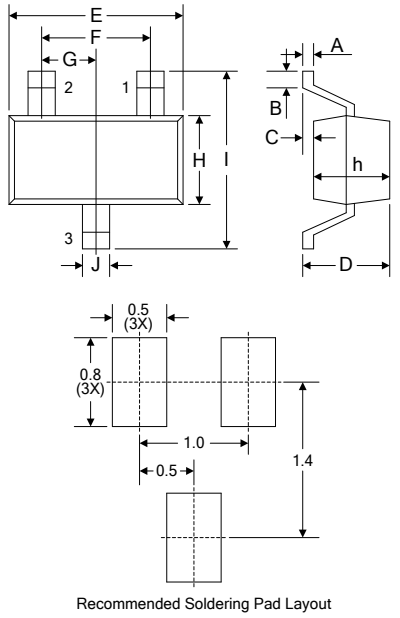

Recommended Soldering Pad Layout

Symbol	Dimension			
	Millimeters		Inches	
	Min.	Max.	Min.	Max.
A	0.10	0.20	0.004	0.008
B	0.28	0.44	0.011	0.017
C	-	0.10	-	0.004
D	0.70	0.90	0.028	0.035
E	1.50	1.70	0.058	0.067
F	0.90	1.10	0.035	0.043
G	0.50TYP		0.020TYP	
H	0.75	0.85	0.030	0.033
I	1.45	1.75	0.057	0.069
J	0.15	0.35	0.006	0.014
h	0.70	0.80	0.028	0.031

Packaging

Tape

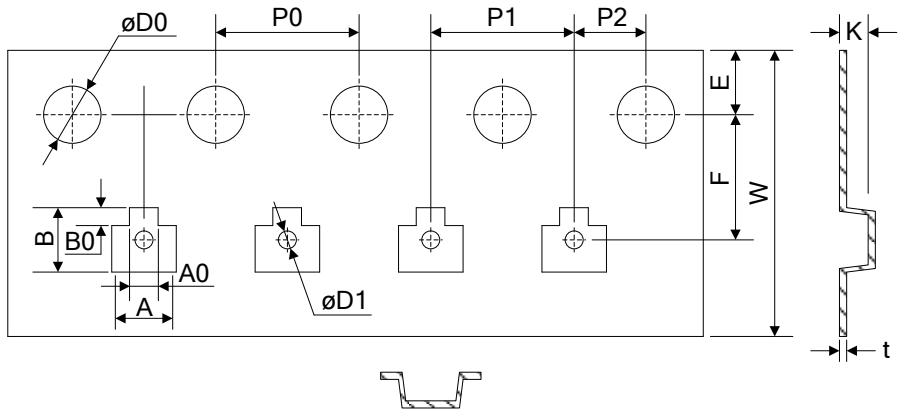

Symbol	Dimension (mm)
W	8.00±0.30
P0	4.00±0.10
P1	4.00±0.10
P2	2.00±0.10
D0	Φ1.55±0.10
D1	Φ0.50±0.05
E	1.75±0.10
F	3.50±0.10
A	1.80±0.10
A0	0.80±0.10
B	1.80±0.10
B0	0.45±0.10
K	0.85±0.10
t	0.20±0.05

Reel

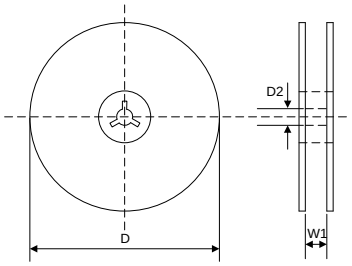

D	Φ178.0±2.0
D2	Φ13.0
W1	9.5
Quantity: 3000PCS	

LEGAL DISCLAIMER

YAGEO, its distributors and agents (collectively, “YAGEO”), hereby disclaims any and all liabilities for any errors, inaccuracies or incompleteness contained in any product related information, including but not limited to product specifications, datasheets, pictures and/or graphics. YAGEO may make changes, modifications and/or improvements to product related information at any time and without notice.

YAGEO makes no representation, warranty, and/or guarantee about the fitness of its products for any particular purpose or the continuing production of any of its products. To the maximum extent permitted by law, YAGEO disclaims (i) any and all liability arising out of the application or use of any YAGEO product, (ii) any and all liability, including without limitation special, consequential or incidental damages, and (iii) any and all implied warranties, including warranties of fitness for a particular purpose, non -infringement and merchantability.

YAGEO products are designed for general purpose applications under normal operation and usage conditions. Please contact YAGEO for the applications listed below which require especially high reliability for the prevention of defects which might directly cause damage to the third party's life, body or property: Aerospace equipment (artificial satellite, rocket, etc.), Atomic energy-related equipment, Aviation equipment, Disaster prevention equipment, crime prevention equipment, Electric heating apparatus, burning equipment, Highly public information network equipment, data-processing equipment , Medical devices, Military equipment, Power generation control equipment, Safety equipment, Traffic signal equipment, Transportation equipment and Undersea equipment, or for any other application or use in which the failure of YAGEO products could result in personal injury or death, or serious property damage. Particularly **YAGEO Corporation and its affiliates do not recommend the use of commercial, automotive, and/or COTS grade products for high reliability applications or manned space flight.**

Information provided here is intended to indicate product specifications only. YAGEO reserves all the rights for revising this content without further notification, as long as products are unchanged. Any product change will be announced by PCN.