Overview

The KEMET VW80808 Automotive-Grade Flexible Termination (FT-CAP) multilayer ceramic capacitors with X8G and X8R dielectrics are designed for a wide range of high-temperature (up to 150°C) applications that demand proven and reliable performance in harsh environments. Suitable for both automotive under-hood and in-cabin use, these components provide the robustness required for mission-critical and safety-critical automotive subsystems and meet both AEC-Q200 and VW80808 requirements.

These devices employ flexible termination technology that limits the transfer of board-induced mechanical stress to the rigid ceramic body, reducing the likelihood of flex cracks that can lead to low insulation resistance or short-circuit failures. While this technology does not prevent all forms of mechanical damage under extreme environmental or handling conditions, it delivers significantly improved flex performance compared to standard termination systems. When combined with KEMET's Ultra-Stable high-temperature dielectric technology, these flex-robust capacitors offer exceptional stability at elevated temperatures. They are RoHS-compliant, rated for operation up to 150°C, and support up to 5 mm of board flex.

The Ultra-Stable X8R dielectric provides the same temperature rating as conventional X8R materials but eliminates the capacitance loss typically caused by applied DC voltage. These devices exhibit no capacitance

change with respect to voltage and demonstrate minimal capacitance variation with temperature. They are suitable replacements for larger or higher-capacitance devices that cannot maintain capacitance stability. Capacitance change over temperature is limited to ±15% from −55°C to +150°C.

KEMET's X8G Class I dielectric also offers a 150°C maximum operating temperature and represents the latest advancement in high-temperature dielectric technology for extreme-temperature and under-hood applications. X8G capacitors exhibit no capacitance change with applied voltage and only minimal variation with temperature. They are suitable replacements for larger or higher-capacitance devices that lack adequate stability. Capacitance change is limited to ±30 ppm/°C from −55°C to +150°C. Developed to meet the demand for more robust and reliable components, X8G dielectric capacitors are ideal for critical applications where reliability and capacitance stability at high temperatures are essential. These devices are widely used in automotive under-hood and harsh-environment systems, as well as general high-temperature industrial applications.

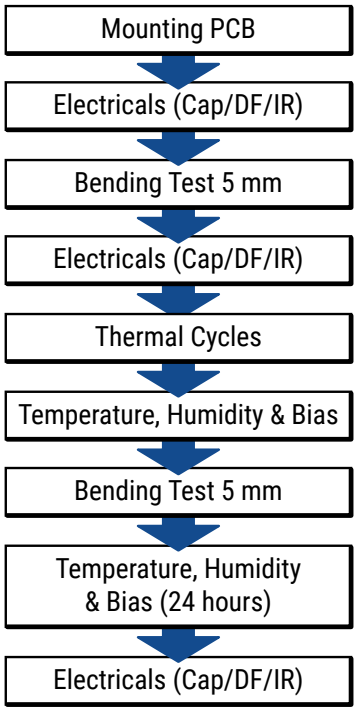

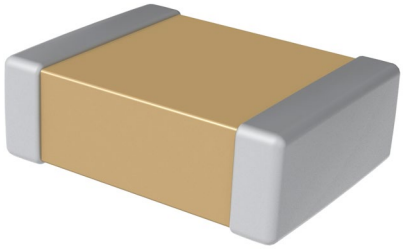

Benefits

- VW 80808 Specification Compliant
- AEC-Q200 automotive qualified.
- Superior flex performance (5 mm)
- 0603 & 0805 Case Sizes
- DC voltage ratings up to 630 V
- Capacitance offerings ranging from 0.5 pF - 47 nF
- Non-polar device, minimizing installation concerns
- Lead (Pb)-Free, RoHS and REACH compliant

Applications

- High current applications (automobile battery line)
- Circuits (direct battery/power connection)
- Control units, sensors, and actuators in motor vehicles
- Electronic and Electrical subsystems
- Direct Battery/Power Circuits
- Filtering (power plane/bus)
- High Voltage Heater
- Inverter, DC/DC
- BMS
- Power Factor Correction

Ordering Information

C	0603	X	473	K	3	T	A	C	3316
Ceramic	Case Size (L" x W")	Specification/ Series	Capacitance Code (pF)	Capacitance Tolerance	Rated Voltage (VDC)	Dielectric	Failure Rate/ Design	Termination Finish[1]	Packaging/Grade (C-Spec)
	0603 0805	X = Flexible Termination	2 Sig. Digits + Number of Zeros. Use 9 for 1.0 - 9.9pF Use 8 for 0.5 - .99pF ex. 2.2pF = 229 ex. 0.5pF = 508	B = ±0.10 pF C = ±0.25 pF D = ±0.5 pF F = ±1% G = ±2% J = ±5% K = ±10% M = ±20%	8 = 10 4 = 16 3 = 25 5 = 50 1 = 100 2 = 200 A = 250 C = 500 B = 630	H = X8R T = X8G	A = N/A	C = 100% Matte Sn	3316 = 7" Reel Unmarked (VW80808 & AEC-Q200) 3317 = 13" Reel Unmarked (VW80808 & AEC-Q200)

[1] *Additional termination finish options may be available. Contact KEMET for details.*

Dimensions – Millimeters (Inches)

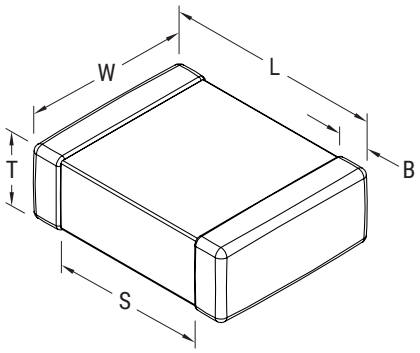

EIA Size Code	Metric Size Code	L Length	W Width	T Thickness	B Bandwidth	S Separation Minimum	Mounting Technique
0603	1608	1.60 (0.063) ± 0.17 (0.007)	0.80 (0.032) ± 0.15 (0.006)	See Table 2 for Thickness	0.45 (0.018) ± 0.15 (0.006)	0.40 (0.016)	Solder wave or Solder reflow
0805	2012	2.00 (0.079) ± 0.30 (0.012)	1.25 (0.049) ± 0.30 (0.012)		0.50 (0.02) ± 0.25 (0.010)	0.60 (0.024)	

Automotive C-Spec Information

KEMET Automotive Grade products meet or exceed the requirements outlined by the Automotive Electronics Council. The details regarding test methods and conditions are referenced in the document AEC–Q200, Stress Test Qualification for Passive Components. These products are supported by a Product Change Notification (PCN) and Production Part Approval Process warrant (PPAP).

Automotive products offered through our distribution channel have been assigned an inclusive ordering code C-Spec, "AUTO". This C-Spec was developed in order to better serve small and medium-sized companies that prefer an automotive grade component, without the requirement to submit a customer Source Controlled Drawing (SCD) or specification for review by a KEMET engineering specialist. This C-Spec is therefore not intended for use by KEMET's OEM Automotive customers and are not granted the same "privileges" as other automotive C-Specs. Customer PCN approval and PPAP request levels are limited (see details below).

Product Change Notification (PCN)

The KEMET Product Change Notification system is used to communicate primarily the following types of changes:

- Product/process changes that affect product form, fit, function, and/or reliability
- Changes in manufacturing site
- Product obsolescence

KEMET Automotive C-Spec	Customer Notification due to:		Days prior to implementation
	Process/Product change	Obsolescence*	
KEMET assigned[1]	Yes (with approval and sign off)	Yes	180 days Minimum
AUTO	Yes (without approval)	Yes	90 days Minimum

[1] KEMET assigned C-Specs require the submittal of a customer SCD or customer specification for review. For additional information contact KEMET.

Production Part Approval Process (PPAP)

The purpose of the Production Part Approval Process is:

- To ensure that supplier can meet the manufacturability and quality requirements for the purchased parts.
- To provide the evidence that all customer engineering design record and specification requirements are properly understood and fulfilled by the manufacturing organization.
- To demonstrate that the established manufacturing process has the potential to produce the part

KEMET Automotive C-Spec	PPAP Level				
	1	2	3	4	5
KEMET assigned[1]	●	●	●	●	●
AUTO[2]			○		

[1] KEMET assigned C-Specs require the submittal of a customer SCD or customer specification for review. For additional information contact KEMET.
[2] For PPAPs, C-specs 3316 & 3317 are considered equivalent to AUTO when there is no SCD or customer specification.

● Part number specific PPAP available with customer information included.
○ Product family PPAP only

Qualification/Certification

This product is VW 80808 Specification Compliant and AEC-Q200 automotive qualified.
For additional information regarding the Automotive Electronics Council and AEC-Q200, please visit their website at www.aecouncil.com.

Environmental Compliance

Lead (Pb)-free, RoHS, and REACH compliant without exemptions.

Electrical Parameters/Characteristics

X8R Electrical Parameters

Item	Parameters/Characteristics
Operating Temperature Range	−55°C to +150°C
Capacitance Change with Reference to +25°C and 0 VDC Applied (TCC)	±15%
Aging Rate (Maximum % Capacitance Loss/Decade Hour)	0%
[1]Dielectric Withstanding Voltage (DWV)	250% of rated voltage (5 ±1 seconds and charge/discharge not exceeding 50mA)
[2]Dissipation Factor (DF) Maximum Limit at 25°C	2.5%
[3]Insulation Resistance (IR) Minimum Limit at 25°C	1,000 MΩ µF or 100 GΩ (Rated voltage applied for 120 ±5 seconds @ 25°C)

[1] DWV is the voltage a capacitor can withstand (survive) for a short period of time. It exceeds the nominal and continuous working voltage of the capacitor.
[2] Capacitance and dissipation factor (DF) measured under the following conditions:
1 MHz ±100 kHz and 1.0 ±0.2 Vrms if capacitance ≤ 1,000 pF.
1 kHz ±50 Hz and 1.0 ±0.2 Vrms if capacitance > 1,000 pF.
[3] To obtain IR limit, divide MΩ-µF value by the capacitance and compare to GΩ limit. Select the lower of the two limits.
Note: When measuring capacitance it is important to ensure the set voltage level is held constant. The HP4284 & Agilent E4980 have a feature known as Automatic Level Control (ALC). The ALC feature should be switched to "ON."

Post Environmental Limits

High Temperature Life, Biased Humidity, Moisture Resistance					
Dielectric	Rated DC Voltage	Capacitance Value	Dissipation Factor (Maximum %)	Capacitance Shift	Insulation Resistance
X8R	All	All	3.0	±20%	10% of Initial Limit

Electrical Parameters/Characteristics cont.

X8G Electrical Parameters

Item	Parameters/Characteristics
Operating Temperature Range	−55°C to +150°C
Capacitance Change with Reference to +25°C and 0 VDC Applied (TCC)	±30 ppm/°C
Aging Rate (Maximum % Capacitance Loss/Decade Hour)	0%
[1]Dielectric Withstanding Voltage (DWV)	See Dielectric Withstanding Voltage (DWV) Table (5 ±1 seconds and charge/discharge not exceeding 50 mA)
[2]Dissipation Factor (DF) Maximum Limit at 25°C	0.1%
[3]Insulation Resistance (IR) Minimum Limit at 25°C	1,000 MΩ µF or 100 GΩ ≤ 250V (Rated voltage applied for 120 ± 5 seconds at 25°C) ≥ 500V (500VDC applied for 120 ± 5 seconds at 25°C)

[1] DWV is the voltage a capacitor can withstand (survive) for a short period of time. It exceeds the nominal and continuous working voltage of the capacitor.

[2] Capacitance and dissipation factor (DF) measured under the following conditions:

1 MHz ±100 kHz and 1.0 ±0.2 Vrms if capacitance ≤ 1,000 pF.

1 kHz ±50 Hz and 1.0 ±0.2 Vrms if capacitance > 1,000 pF.

[3] To obtain IR limit, divide MΩ-µF value by the capacitance and compare to GΩ limit. Select the lower of the two limits.

Note: When measuring capacitance it is important to ensure the set voltage level is held constant. The HP4284 & Agilent E4980 have a feature known as Automatic Level Control (ALC). The ALC feature should be switched to "ON."

Post Environmental Limits

High Temperature Life, Biased Humidity, Moisture Resistance					
Dielectric	Rated DC Voltage	Capacitance Value	Dissipation Factor (Maximum %)	Capacitance Shift	Insulation Resistance
X8G	All	All	0.5	0.3% or ± 0.25 pf	10% of Initial Limit

Dielectric Withstanding Voltage (DWV) Table

EIA Case Size	≤ 250V	500V	630V	1000V
0603	250% of rated voltage	150% of rated voltage	130% of rated voltage	120% of rated voltage
0805	250% of rated voltage	150% of rated voltage	< 620pF 150% of rated voltage ≥ 620pF 130% of rated voltage	120% of rated voltage

Table 1 – X8R Capacitance Range/Selection Waterfall (0603 & 0805 Case Size)

Capacitance (pF)	Cap Code	Case Size/ Series	C0603X					C0805X				
		Rated Voltage (VDC)	10	16	25	50	100	10	16	25	50	100
		Voltage Code	8	4	3	5	1	8	4	3	5	1
0.50pF	508	Capacitance Tolerances: B = ±0.10pF C = ±0.25pF D = ±0.5pF	CJ	CJ	CJ	CJ	CJ	DR	DR	DR	DR	DR
0.75pF	758		CJ	CJ	CJ	CJ	CJ	DR	DR	DR	DR	DR
1pF	109		CJ	CJ	CJ	CJ	CJ	DR	DR	DR	DR	DR
1.1pF	119		CJ	CJ	CJ	CJ	CJ	DR	DR	DR	DR	DR
1.2pF	129		CJ	CJ	CJ	CJ	CJ	DR	DR	DR	DR	DR
1.3pF	139		CJ	CJ	CJ	CJ	CJ	DR	DR	DR	DR	DR
1.5pF	159		CJ	CJ	CJ	CJ	CJ	DR	DR	DR	DR	DR
1.6pF	169		CJ	CJ	CJ	CJ	CJ	DR	DR	DR	DR	DR
1.8pF	189		CJ	CJ	CJ	CJ	CJ	DR	DR	DR	DR	DR
2.0pF	209		CJ	CJ	CJ	CJ	CJ	DR	DR	DR	DR	DR
2.2pF	229		CJ	CJ	CJ	CJ	CJ	DR	DR	DR	DR	DR
2.4pF	249		CJ	CJ	CJ	CJ	CJ	DR	DR	DR	DR	DR
2.7pF	279		CJ	CJ	CJ	CJ	CJ	DR	DR	DR	DR	DR
3.0pF	309		CJ	CJ	CJ	CJ	CJ	DR	DR	DR	DR	DR
3.3pF	339		CJ	CJ	CJ	CJ	CJ	DR	DR	DR	DR	DR
3.6pF	369		CJ	CJ	CJ	CJ	CJ	DR	DR	DR	DR	DR
3.9pF	399		CJ	CJ	CJ	CJ	CJ	DR	DR	DR	DR	DR
4.3pF	439		CJ	CJ	CJ	CJ	CJ	DR	DR	DR	DR	DR
4.7pF	479		CJ	CJ	CJ	CJ	CJ	DR	DR	DR	DR	DR
5.1pF	519		CJ	CJ	CJ	CJ	CJ	DR	DR	DR	DR	DR
5.6pF	569		CJ	CJ	CJ	CJ	CJ	DR	DR	DR	DR	DR
6.2pF	629		CJ	CJ	CJ	CJ	CJ	DR	DR	DR	DR	DR
6.8pF	689		CJ	CJ	CJ	CJ	CJ	DR	DR	DR	DR	DR
7.5pF	759		CJ	CJ	CJ	CJ	CJ	DR	DR	DR	DR	DR
8.2pF	829		CJ	CJ	CJ	CJ	CJ	DR	DR	DR	DR	DR
9.1pF	919		CJ	CJ	CJ	CJ	CJ	DR	DR	DR	DR	DR
10pF	100	Capacitance Tolerances: F = ±1% G = ±2% J = ±5% K = ±10% M = ±20%	CJ	CJ	CJ	CJ	CJ	DR	DR	DR	DR	DR
11pF	110		CJ	CJ	CJ	CJ	CJ	DR	DR	DR	DR	DR
12pF	120		CJ	CJ	CJ	CJ	CJ	DR	DR	DR	DR	DR
13pF	130		CJ	CJ	CJ	CJ	CJ	DR	DR	DR	DR	DR
15pF	150		CJ	CJ	CJ	CJ	CJ	DR	DR	DR	DR	DR
16pF	160		CJ	CJ	CJ	CJ	CJ	DR	DR	DR	DR	DR
18pF	180		CJ	CJ	CJ	CJ	CJ	DR	DR	DR	DR	DR
20pF	200		CJ	CJ	CJ	CJ	CJ	DR	DR	DR	DR	DR
22pF	220		CJ	CJ	CJ	CJ	CJ	DR	DR	DR	DR	DR
24pF	240		CJ	CJ	CJ	CJ	CJ	DR	DR	DR	DR	DR
27pF	270		CJ	CJ	CJ	CJ	CJ	DR	DR	DR	DR	DR
30pF	300		CJ	CJ	CJ	CJ	CJ	DR	DR	DR	DR	DR
33pF	330		CJ	CJ	CJ	CJ	CJ	DR	DR	DR	DR	DR
36pF	360		CJ	CJ	CJ	CJ	CJ	DR	DR	DR	DR	DR
39pF	390		CJ	CJ	CJ	CJ	CJ	DR	DR	DR	DR	DR
43pF	430		CJ	CJ	CJ	CJ	CJ	DR	DR	DR	DR	DR
47pF	470		CJ	CJ	CJ	CJ	CJ	DR	DR	DR	DR	DR
51pF	510		CJ	CJ	CJ	CJ	CJ	DR	DR	DR	DR	DR
56pF	560		CJ	CJ	CJ	CJ	CJ	DR	DR	DR	DR	DR
62pF	620		CJ	CJ	CJ	CJ	CJ	DR	DR	DR	DR	DR
68pF	680		CJ	CJ	CJ	CJ	CJ	DR	DR	DR	DR	DR
75pF	750		CJ	CJ	CJ	CJ	CJ	DR	DR	DR	DR	DR
82pF	820		CJ	CJ	CJ	CJ	CJ	DR	DR	DR	DR	DR
91pF	910		CJ	CJ	CJ	CJ	CJ	DR	DR	DR	DR	DR
100pF	101		CJ	CJ	CJ	CJ	CJ	DR	DR	DR	DR	DR
110pF	111		CJ	CJ	CJ	CJ	CJ	DR	DR	DR	DR	DR
120pF	121		CJ	CJ	CJ	CJ	CJ	DR	DR	DR	DR	DR
130pF	131		CJ	CJ	CJ	CJ	CJ	DR	DR	DR	DR	DR
150pF	151		CJ	CJ	CJ	CJ	CJ	DR	DR	DR	DR	DR
160pF	161		CJ	CJ	CJ	CJ	CJ	DR	DR	DR	DR	DR
Capacitance (pF)	Cap Code	Voltage Code	8	4	3	5	1	8	4	3	5	1
		Rated Voltage (VDC)	10	16	25	50	100	10	16	25	50	100
		Case Size/Series	C0603X					C0805X				

Table 1 – X8R Capacitance Range/Selection Waterfall (0603 & 0805 Case Size) cont.

Capacitance (pF)	Cap Code	Case Size/ Series	C0603X					C0805X				
		Rated Voltage (VDC)	10	16	25	50	100	10	16	25	50	100
		Voltage Code	8	4	3	5	1	8	4	3	5	1
180pF	181		CJ	CJ	CJ	CJ	CJ	DR	DR	DR	DR	DR
200pF	201		CJ	CJ	CJ	CJ	CJ	DR	DR	DR	DR	DR
220pF	221		CJ	CJ	CJ	CJ	CJ	DR	DR	DR	DR	DR
240pF	241		CJ	CJ	CJ	CJ	CJ	DR	DR	DR	DR	DR
270pF	271		CJ	CJ	CJ	CJ	CJ	DR	DR	DR	DR	DR
300pF	301		CJ	CJ	CJ	CJ	CJ	DR	DR	DR	DR	DR
330pF	331		CJ	CJ	CJ	CJ	CJ	DR	DR	DR	DR	DR
360pF	361		CJ	CJ	CJ	CJ	CJ	DR	DR	DR	DR	DR
390pF	391		CJ	CJ	CJ	CJ	CJ	DR	DR	DR	DR	DR
430pF	431		CJ	CJ	CJ	CJ	CJ	DR	DR	DR	DR	DR
470pF	471		CJ	CJ	CJ	CJ	CJ	DR	DR	DR	DR	DR
510pF	511		CJ	CJ	CJ	CJ	CJ	DR	DR	DR	DR	DR
560pF	561		CJ	CJ	CJ	CJ	CJ	DR	DR	DR	DR	DR
620pF	621		CJ	CJ	CJ	CJ	CJ	DR	DR	DR	DR	DR
680pF	681		CJ	CJ	CJ	CJ	CJ	DR	DR	DR	DR	DR
750pF	751		CJ	CJ	CJ	CJ	CJ	DR	DR	DR	DR	DR
820pF	821		CJ	CJ	CJ	CJ	CJ	DR	DR	DR	DR	DR
910pF	911		CJ	CJ	CJ	CJ	CJ	DR	DR	DR	DR	DD
1000pF	102		CJ	CJ	CJ	CJ	CJ	DR	DR	DR	DR	DD
1100pF	112		CJ	CJ	CJ	CJ	CJ	DR	DR	DR	DR	DR
1200pF	122		CJ	CJ	CJ	CJ	CJ	DR	DR	DR	DR	DR
1300pF	132	Capacitance Tolerances:	CJ	CJ	CJ	CJ	CJ	DD	DD	DD	DD	DD
1500pF	152		CJ	CJ	CJ	CJ	CJ	DD	DD	DD	DD	DD
1600pF	162	F = ±1%	CJ	CJ	CJ	CJ	CJ	DD	DD	DD	DD	DD
1800pF	182	G = ±2%	CJ	CJ	CJ	CJ	CJ	DD	DD	DD	DD	DD
2000pF	202	J = ±5%	CJ	CJ	CJ	CJ	CJ	DR	DR	DR	DR	DR
2200pF	222	K = ±10%	CJ	CJ	CJ	CJ	CJ	DR	DR	DR	DR	DR
2400pF	242	M = ±20%	CJ	CJ	CJ	CJ	CJ	DR	DR	DR	DR	DR
2700pF	272		CJ	CJ	CJ	CJ	CJ	DR	DR	DR	DR	DR
3000pF	302		CJ	CJ	CJ	CJ	CJ	DR	DR	DR	DR	DR
3300pF	332		CJ	CJ	CJ	CJ	CJ	DR	DR	DR	DR	DR
3600pF	362		CJ	CJ	CJ	CJ	CJ	DR	DR	DR	DR	DR
3900pF	392		CJ	CJ	CJ	CJ	CJ	DR	DR	DR	DR	DR
4300pF	432		CJ	CJ	CJ	CJ	CJ	DR	DR	DR	DR	DR
4700pF	472		CJ	CJ	CJ	CJ	CJ	DR	DR	DR	DR	DR
5100pF	512		CJ	CJ	CJ	CJ		DR	DR	DR	DR	DR
5600pF	562		CJ	CJ	CJ	CJ		DR	DR	DR	DR	DR
6200pF	622		CJ	CJ	CJ	CJ		DR	DR	DR	DR	DR
6800pF	682		CJ	CJ	CJ	CJ		DR	DR	DR	DR	DR
7500pF	752		CJ	CJ	CJ			DR	DR	DR	DR	DR
8200pF	822		CJ	CJ	CJ			DR	DR	DR	DR	DR
9100pF	912		CJ	CJ	CJ			DR	DR	DR	DR	DR
0.01µF	103		CJ	CJ	CJ			DR	DR	DR	DR	DD
0.012µF	123							DR	DR	DR	DR	DS
0.015µF	153							DR	DR	DR	DD	DG
0.018µF	183							DR	DR	DR	DD	
0.022µF	223							DD	DD	DD	DF	
0.027µF	273							DF	DF	DF		
0.033µF	333							DG	DG	DG		
Capacitance (pF)	Cap Code	Voltage Code	8	4	3	5	1	8	4	3	5	1
		Rated Voltage (VDC)	10	16	25	50	100	10	16	25	50	100
		Case Size/Series	C0603X					C0805X				

Table 1 – X8G Capacitance Range/Selection Waterfall (0603 & 0805 Case Size)

Capacitance (pF)	Cap Code	Case Size/ Series	C0603X									C0805X				
		Rated Voltage (VDC)	10	16	25	50	100	200	250	500	630	10	16	25	50	100
		Voltage Code	8	4	3	5	1	2	A	C	B	8	4	3	5	1
0.50pF	508	Capacitance Tolerances: B = ±0.10pF C = ±0.25pF D = ±0.5pF	CJ	CJ	CJ	CJ	CJ	CJ	CJ			DR	DR	DR	DR	DR
0.75pF	758		CJ	CJ	CJ	CJ	CJ	CJ	CJ			DR	DR	DR	DR	DR
1pF	109		CJ	CJ	CJ	CJ	CJ	CJ	CJ			DR	DR	DR	DR	DR
1.1pF	119		CJ	CJ	CJ	CJ	CJ	CJ	CJ			DR	DR	DR	DR	DR
1.2pF	129		CJ	CJ	CJ	CJ	CJ	CJ	CJ			DR	DR	DR	DR	DR
1.3pF	139		CJ	CJ	CJ	CJ	CJ	CJ	CJ			DR	DR	DR	DR	DR
1.5pF	159		CJ	CJ	CJ	CJ	CJ	CJ	CJ			DR	DR	DR	DR	DR
1.6pF	169		CJ	CJ	CJ	CJ	CJ	CJ	CJ			DR	DR	DR	DR	DR
1.8pF	189		CJ	CJ	CJ	CJ	CJ	CJ	CJ			DR	DR	DR	DR	DR
2.0pF	209		CJ	CJ	CJ	CJ	CJ	CJ	CJ			DR	DR	DR	DR	DR
2.2pF	229		CJ	CJ	CJ	CJ	CJ	CJ	CJ			DR	DR	DR	DR	DR
2.4pF	249		CJ	CJ	CJ	CJ	CJ	CJ	CJ			DR	DR	DR	DR	DR
2.7pF	279		CJ	CJ	CJ	CJ	CJ	CJ	CJ			DR	DR	DR	DR	DR
3.0pF	309		CJ	CJ	CJ	CJ	CJ	CJ	CJ			DR	DR	DR	DR	DR
3.3pF	339		CJ	CJ	CJ	CJ	CJ	CJ	CJ			DR	DR	DR	DR	DR
3.6pF	369		CJ	CJ	CJ	CJ	CJ	CJ	CJ			DR	DR	DR	DR	DR
3.9pF	399		CJ	CJ	CJ	CJ	CJ	CJ	CJ			DR	DR	DR	DR	DR
4.3pF	439		CJ	CJ	CJ	CJ	CJ	CJ	CJ			DR	DR	DR	DR	DR
4.7pF	479		CJ	CJ	CJ	CJ	CJ	CJ	CJ			DR	DR	DR	DR	DR
5.1pF	519		CJ	CJ	CJ	CJ	CJ	CJ	CJ			DR	DR	DR	DR	DR
5.6pF	569		CJ	CJ	CJ	CJ	CJ	CJ	CJ			DR	DR	DR	DR	DR
6.2pF	629		CJ	CJ	CJ	CJ	CJ	CJ	CJ			DR	DR	DR	DR	DR
6.8pF	689		CJ	CJ	CJ	CJ	CJ	CJ	CJ			DR	DR	DR	DR	DR
7.5pF	759		CJ	CJ	CJ	CJ	CJ	CJ	CJ			DR	DR	DR	DR	DR
8.2pF	829		CJ	CJ	CJ	CJ	CJ	CJ	CJ			DR	DR	DR	DR	DR
9.1pF	919		CJ	CJ	CJ	CJ	CJ	CJ	CJ			DR	DR	DR	DR	DR
10pF	100	Capacitance Tolerances: F = ±1% G = ±2% J = ±5% K = ±10% M = ±20%	CJ	CJ	CJ	CJ	CJ	CJ	CJ			DR	DR	DR	DR	DR
11pF	110		CJ	CJ	CJ	CJ	CJ	CJ	CJ			DR	DR	DR	DR	DR
12pF	120		CJ	CJ	CJ	CJ	CJ	CJ	CJ			DR	DR	DR	DR	DR
13pF	130		CJ	CJ	CJ	CJ	CJ	CJ	CJ			DR	DR	DR	DR	DR
15pF	150		CJ	CJ	CJ	CJ	CJ	CJ	CJ			DR	DR	DR	DR	DR
16pF	160		CJ	CJ	CJ	CJ	CJ	CJ	CJ			DR	DR	DR	DR	DR
18pF	180		CJ	CJ	CJ	CJ	CJ	CJ	CJ			DR	DR	DR	DR	DR
20pF	200		CJ	CJ	CJ	CJ	CJ	CJ	CJ			DR	DR	DR	DR	DR
22pF	220		CJ	CJ	CJ	CJ	CJ	CJ	CJ			DR	DR	DR	DR	DR
24pF	240		CJ	CJ	CJ	CJ	CJ	CJ	CJ			DR	DR	DR	DR	DR
27pF	270		CJ	CJ	CJ	CJ	CJ	CJ	CJ			DR	DR	DR	DR	DR
30pF	300		CJ	CJ	CJ	CJ	CJ	CJ	CJ			DR	DR	DR	DR	DR
33pF	330		CJ	CJ	CJ	CJ	CJ	CJ	CJ			DR	DR	DR	DR	DR
36pF	360		CJ	CJ	CJ	CJ	CJ	CJ	CJ			DR	DR	DR	DR	DR
39pF	390		CJ	CJ	CJ	CJ	CJ	CJ	CJ			DR	DR	DR	DR	DR
43pF	430		CJ	CJ	CJ	CJ	CJ	CJ	CJ			DR	DR	DR	DR	DR
47pF	470		CJ	CJ	CJ	CJ	CJ	CJ	CJ			DR	DR	DR	DR	DR
51pF	510		CJ	CJ	CJ	CJ	CJ	CJ	CJ			DR	DR	DR	DR	DR
56pF	560		CJ	CJ	CJ	CJ	CJ	CJ	CJ			DR	DR	DR	DR	DR
62pF	620		CJ	CJ	CJ	CJ	CJ	CJ	CJ			DR	DR	DR	DR	DR
68pF	680		CJ	CJ	CJ	CJ	CJ	CJ	CJ			DR	DR	DR	DR	DR
75pF	750		CJ	CJ	CJ	CJ	CJ	CJ	CJ			DR	DR	DR	DR	DR
82pF	820		CJ	CJ	CJ	CJ	CJ	CJ	CJ			DR	DR	DR	DR	DR
91pF	910		CJ	CJ	CJ	CJ	CJ	CJ	CJ			DR	DR	DR	DR	DR
100pF	101		CJ	CJ	CJ	CJ	CJ	CJ	CJ	CJ	CJ	DR	DR	DR	DR	DR
110pF	111		CJ	CJ	CJ	CJ	CJ	CJ	CJ	CJ	CJ	DR	DR	DR	DR	DR
120pF	121		CJ	CJ	CJ	CJ	CJ	CJ	CJ	CJ	CJ	DR	DR	DR	DR	DR
130pF	131		CJ	CJ	CJ	CJ	CJ	CJ	CJ	CJ	CJ	DR	DR	DR	DR	DR
150pF	151		CJ	CJ	CJ	CJ	CJ	CJ	CJ	CJ	CJ	DR	DR	DR	DR	DR
160pF	161		CJ	CJ	CJ	CJ	CJ	CJ	CJ	CJ	CJ	DR	DR	DR	DR	DR
Capacitance (pF)	Cap Code	Voltage Code	8	4	3	5	1	2	A	C	B	8	4	3	5	1
		Rated Voltage (VDC)	10	16	25	50	100	200	250	500	630	10	16	25	50	100
		Case Size/Series	C0603X									C0805X				

Table 1 – X8G Capacitance Range/Selection Waterfall (0603 & 0805 Case Size) cont.

Capacitance (pF)	Cap Code	Case Size/ Series	C0603X									C0805X				
		Rated Voltage (VDC)	10	16	25	50	100	200	250	500	630	10	16	25	50	100
		Voltage Code	8	4	3	5	1	2	A	C	B	8	4	3	5	1
180pF	181		CJ	CJ	CJ	CJ	CJ	CJ	CJ	CJ	CJ	DR	DR	DR	DR	DR
200pF	201		CJ	CJ	CJ	CJ	CJ	CJ	CJ	CJ	CJ	DR	DR	DR	DR	DR
220pF	221		CJ	CJ	CJ	CJ	CJ	CJ	CJ	CJ	CJ	DR	DR	DR	DR	DR
240pF	241		CJ	CJ	CJ	CJ	CJ	CJ	CJ	CJ	CJ	DR	DR	DR	DR	DR
270pF	271		CJ	CJ	CJ	CJ	CJ	CJ	CJ	CJ	CJ	DR	DR	DR	DR	DR
300pF	301		CJ	CJ	CJ	CJ	CJ	CJ	CJ	CJ	CJ	DR	DR	DR	DR	DR
330pF	331		CJ	CJ	CJ	CJ	CJ	CJ	CJ	CJ	CJ	DR	DR	DR	DR	DR
360pF	361		CJ	CJ	CJ	CJ	CJ	CJ	CJ	CJ	CJ	DR	DR	DR	DR	DR
390pF	391		CJ	CJ	CJ	CJ	CJ	CJ	CJ	CJ	CJ	DR	DR	DR	DR	DR
430pF	431		CJ	CJ	CJ	CJ	CJ	CJ	CJ	CJ	CJ	DR	DR	DR	DR	DR
470pF	471		CJ	CJ	CJ	CJ	CJ	CJ	CJ	CJ	CJ	DR	DR	DR	DR	DR
510pF	511		CJ	CJ	CJ	CJ	CJ	CJ	CJ	CJ	CJ	DR	DR	DR	DR	DR
560pF	561		CJ	CJ	CJ	CJ	CJ	CJ	CJ	CJ	CJ	DR	DR	DR	DR	DR
620pF	621		CJ	CJ	CJ	CJ	CJ	CJ	CJ	CJ	CJ	DR	DR	DR	DR	DR
680pF	681		CJ	CJ	CJ	CJ	CJ	CJ	CJ	CJ	CJ	DR	DR	DR	DR	DR
750pF	751		CJ	CJ	CJ	CJ	CJ	CJ	CJ			DR	DR	DR	DR	DR
820pF	821		CJ	CJ	CJ	CJ	CJ	CJ	CJ			DR	DR	DR	DR	DR
910pF	911		CJ	CJ	CJ	CJ	CJ	CJ	CJ			DR	DR	DR	DR	DD
1000pF	102		CJ	CJ	CJ	CJ	CJ	CJ	CJ			DR	DR	DR	DR	DD
1100pF	112		CJ	CJ	CJ	CJ	CJ	CH	CH			DR	DR	DR	DR	DR
1200pF	122		CJ	CJ	CJ	CJ	CJ	CH	CH			DR	DR	DR	DR	DR
1300pF	132	Capacitance Tolerances:	CJ	CJ	CJ	CJ	CJ	CH	CH			DD	DD	DD	DD	DD
1500pF	152		CJ	CJ	CJ	CJ	CJ	CH	CH			DD	DD	DD	DD	DD
1600pF	162		CJ	CJ	CJ	CJ	CJ	CH	CH			DD	DD	DD	DD	DD
1800pF	182	F = ±1%	CJ	CJ	CJ	CJ	CJ	CH	CH			DD	DD	DD	DD	DD
2000pF	202	G = ±2%	CJ	CJ	CJ	CJ	CJ	CH	CH			DR	DR	DR	DR	DR
2200pF	222	J = ±5%	CJ	CJ	CJ	CJ	CJ	CH	CH			DR	DR	DR	DR	DR
2400pF	242	K = ±10%	CJ	CJ	CJ	CJ	CJ					DR	DR	DR	DR	DR
2700pF	272	M = ±20%	CJ	CJ	CJ	CJ	CJ					DR	DR	DR	DR	DR
3000pF	302		CJ	CJ	CJ	CJ	CJ					DD	DD	DR	DR	DR
3300pF	332		CJ	CJ	CJ	CJ	CJ					DD	DD	DR	DR	DR
3600pF	362		CJ	CJ	CJ	CJ	CJ					DD	DD	DR	DR	DR
3900pF	392		CJ	CJ	CJ	CJ	CJ					DS	DS	DR	DR	DR
4300pF	432		CJ	CJ	CJ	CJ	CJ					DS	DS	DR	DR	DR
4700pF	472		CJ	CJ	CJ	CJ	CJ					DS	DS	DR	DR	DR
5100pF	512		CJ	CJ	CJ	CJ						DS	DS	DR	DR	DR
5600pF	562		CJ	CJ	CJ	CJ						DR	DR	DR	DR	DR
6200pF	622		CJ	CJ	CJ	CJ						DR	DR	DR	DR	DR
6800pF	682		CJ	CJ	CJ	CJ						DR	DR	DR	DR	DR
7500pF	752		CJ	CJ	CJ							DR	DR	DR	DR	DR
8200pF	822		CJ	CJ	CJ							DR	DR	DR	DR	DR
9100pF	912		CJ	CJ	CJ							DR	DR	DR	DR	DR
0.01µF	103		CJ	CJ	CJ							DR	DR	DR	DR	DD
0.012µF	123		CJ	CJ	CJ							DR	DR	DR	DR	DS
0.015µF	153		CJ	CJ	CJ							DR	DR	DR	DD	DG
0.018µF	183											DR	DR	DR	DD	
0.022µF	223											DD	DD	DD	DF	
0.027µF	273											DF	DF	DF		
0.033µF	333											DG	DG	DG		
0.039µF	393											DG	DG	DG		
0.047µF	473											DG	DG	DG		
Capacitance (pF)	Cap Code	Voltage Code	8	4	3	5	1	2	A	C	B	8	4	3	5	1
		Rated Voltage (VDC)	10	16	25	50	100	200	250	500	630	10	16	25	50	100
		Case Size/Series	C0603X									C0805X				

Table 2 – Chip Thickness/Tape & Reel Packaging Quantities

Thickness Code	Case Size	Thickness ± Range (mm)	Paper Quantity		Plastic Quantity	
			7" Reel	13" Reel	7" Reel	13" Reel
CJ	0603	0.80 ± 0.15	4,000	15,000	0	0
CH	0603	0.85 ±0.07	4,000	10,000	0	0
DR	0805	0.78 ±0.20	0	0	4,000	10,000
DD	0805	0.90 ±0.10	0	0	4,000	10,000
DS	0805	1.00 ±0.10	0	0	2,500	10,000
DF	0805	1.10 ±0.10	0	0	2,500	10,000
DG	0805	1.25 ±0.15	0	0	2,500	10,000
Thickness Code	**Case Size**	**Thickness ± Range (mm)**	**7" Reel**	**13" Reel**	**7" Reel**	**13" Reel**
			Paper Quantity[1]		**Plastic Quantity**	

Table 3 – Chip Capacitor Land Pattern Design Recommendations per IPC–7351

EIA Size Code	Metric Size Code	Density Level A: Maximum (Most) Land Protrusion (mm)					Density Level B: Median (Nominal) Land Protrusion (mm)					Density Level C: Minimum (Least) Land Protrusion (mm)				
		C	Y	X	V1	V2	C	Y	X	V1	V2	C	Y	X	V1	V2
0603	1608	0.85	1.25	1.10	4.00	2.10	0.75	1.05	1.00	3.10	1.50	0.65	0.85	0.90	2.40	1.20
0805	2012	0.99	1.44	1.66	4.47	2.71	0.89	1.24	1.56	3.57	2.11	0.79	1.04	1.46	2.42	1.81
1206	3216	1.59	1.62	2.06	5.85	3.06	1.49	1.42	1.96	4.95	2.46	1.39	1.22	1.86	4.25	2.16
1210	3225	1.59	1.62	3.01	5.90	4.01	1.49	1.42	2.91	4.95	3.41	1.39	1.22	2.81	4.25	3.11
1808	4520	2.30	1.75	2.30	7.40	3.30	2.20	1.55	2.20	6.50	2.70	2.10	1.35	2.10	5.80	2.40
1812	4532	2.10	1.80	3.60	7.00	4.60	2.00	1.60	3.50	6.10	4.00	1.90	1.40	3.40	5.40	3.70
1825	4564	2.15	1.80	6.90	7.10	7.90	2.05	1.60	6.80	6.20	7.30	1.95	1.40	6.70	5.50	7.00
2220	5650	2.85	2.10	5.50	8.80	6.50	2.75	1.90	5.40	7.90	5.90	2.65	1.70	5.30	7.20	5.60
2225	5664	2.85	2.10	6.90	8.80	7.90	2.75	1.90	6.80	7.90	7.30	2.65	1.70	6.70	7.20	7.00

Density Level A: *For low-density product applications. Recommended for wave solder applications and provides a wider process window for reflow solder processes. KEMET only recommends wave soldering of EIA 0603, 0805 and 1206 case sizes.*
Density Level B: *For products with a moderate level of component density. Provides a robust solder attachment condition for reflow solder processes.*
Density Level C: *For high component density product applications. Before adapting the minimum land pattern variations the user should perform qualification testing based on the conditions outlined in IPC Standard 7351 (IPC–7351).*

Image below based on Density Level B for an EIA 1210 case size.

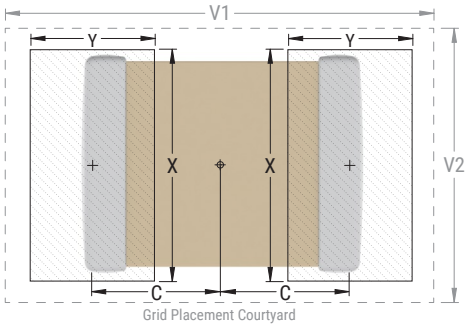

Soldering Process

Recommended Soldering Technique:
- Solder wave or solder reflow for EIA case sizes 0603, 0805 and 1206
- All other EIA case sizes are limited to solder reflow only

Recommended Reflow Soldering Profile:
See " SMD MLCC Reflow " Sheet

Profile Feature	Termination Finish	
	SnPb	100% Matte Sn
Preheat/Soak		
Temperature Minimum (T_{Smin})	100°C	150°C
Temperature Maximum (T_{Smax})	150°C	200°C
Time (t_S) from T_{Smin} to T_{Smax}	60 – 120 seconds	60 – 120 seconds
Ramp-Up Rate (T_L to T_P)	3°C/second maximum	3°C/second maximum
Liquidous Temperature (T_L)	183°C	217°C
Time Above Liquidous (t_L)	60 – 150 seconds	60 – 150 seconds
Peak Temperature (T_P)	235°C	260°C
Time Within 5°C of Maximum Peak Temperature (t_P)	20 seconds maximum	30 seconds maximum
Ramp-Down Rate (T_P to T_L)	6°C/second maximum	6°C/second maximum
Time 25°C to Peak Temperature	6 minutes maximum	8 minutes maximum

Note: All temperatures refer to the center of the package, measured on the capacitor body surface that is facing up during assembly reflow.

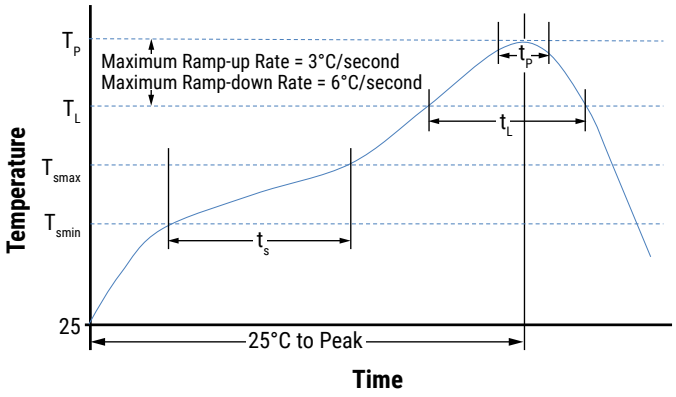

Storage and Handling

Ceramic chip capacitors should be stored in normal working environments. While the chips themselves are quite robust in other environments, solderability will be degraded by exposure to high temperatures, high humidity, corrosive atmospheres, and long term storage. In addition, packaging materials will be degraded by high temperature – reels may soften or warp and tape peel force may increase. KEMET recommends that maximum storage temperature not exceed 40ºC and maximum storage humidity not exceed 70% relative humidity. Temperature fluctuations should be minimized to avoid condensation on the parts and atmospheres should be free of chlorine and sulfur bearing compounds. For optimized solderability chip stock should be used promptly, preferably within 1.5 years of receipt.

Construction

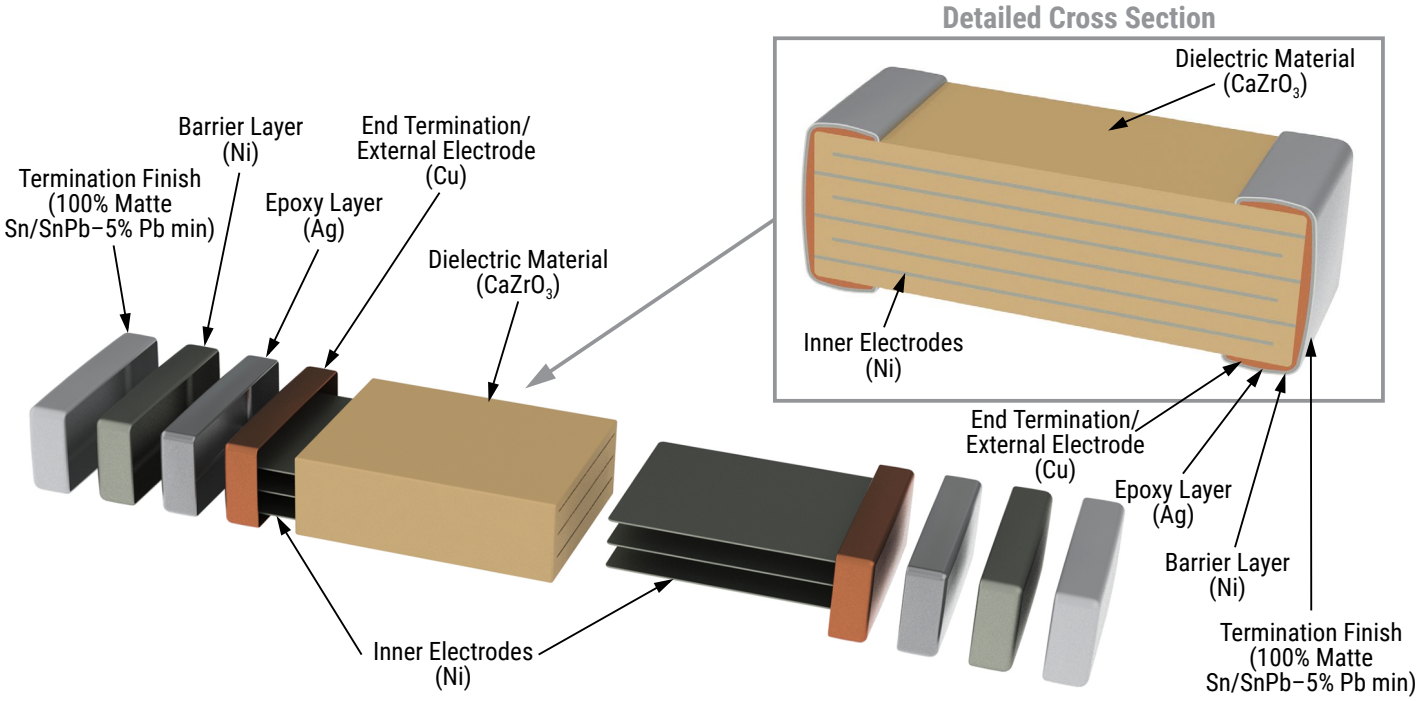

Capacitor Marking (Optional)

These surface mount multilayer ceramic capacitors are normally supplied unmarked. If required, they can be marked as an extra cost option. Marking is available on most KEMET devices, but must be requested using the correct ordering code identifier(s). If this option is requested, two sides of the ceramic body will be laser marked with a "K" to identify KEMET, followed by two characters (per EIA–198 - see table below) to identify the capacitance value. EIA 0603 case size devices are limited to the "K" character only.

Laser marking option is not available on:

- C0G, ultra stable X8R and Y5V dielectric devices.
- EIA 0402 case size devices.
- EIA 0603 case size devices with flexible termination option.
- KPS commercial and automotive grade stacked devices.
- X7R dielectric products in capacitance values outlined below.

EIA Case Size	Metric Size Code	Capacitance
0603	1608	≤ 170 pF
0805	2012	≤ 150 pF
1206	3216	≤ 910 pF
1210	3225	≤ 2,000 pF
1808	4520	≤ 3,900 pF
1812	4532	≤ 6,700 pF
1825	4564	≤ 0.018 µF
2220	5650	≤ 0.027 µF
2225	5664	≤ 0.033 µF

Laser marking option is not available on:

- C0G, U2J, X8G, X8R and Y5V dielectric devices.
- EIA 0402 case size devices.
- EIA 0603 case size devices with Flexible Termination option.
- KPS Commercial and Automotive grade stacked devices.

These capacitors are supplied unmarked only.

Marking appears in legible contrast. Illustrated below is an example of an MLCC with laser marking of "KA8", which designates a KEMET device with rated capacitance of 100 µF. Orientation of marking is vendor optional.

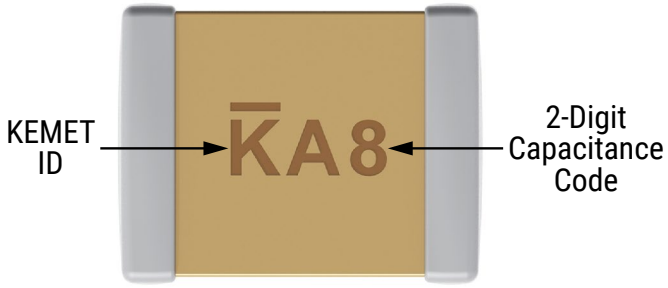

Capacitor Marking (Optional) cont.

Capacitance (pF) For Various Alpha/Numeral Identifiers										
Alpha Character	Numeral									
	9	0	1	2	3	4	5	6	7	8
	Capacitance (pF)									
A	0.10	1.0	10	100	1,000	10,000	100,000	1,000,000	10,000,000	100,000,000
B	0.11	1.1	11	110	1,100	11,000	110,000	1,100,000	11,000,000	110,000,000
C	0.12	1.2	12	120	1,200	12,000	120,000	1,200,000	12,000,000	120,000,000
D	0.13	1.3	13	130	1,300	13,000	130,000	1,300,000	13,000,000	130,000,000
E	0.15	1.5	15	150	1,500	15,000	150,000	1,500,000	15,000,000	150,000,000
F	0.16	1.6	16	160	1,600	16,000	160,000	1,600,000	16,000,000	160,000,000
G	0.18	1.8	18	180	1,800	18,000	180,000	1,800,000	18,000,000	180,000,000
H	0.20	2.0	20	200	2,000	20,000	200,000	2,000,000	20,000,000	200,000,000
J	0.22	2.2	22	220	2,200	22,000	220,000	2,200,000	22,000,000	220,000,000
K	0.24	2.4	24	240	2,400	24,000	240,000	2,400,000	24,000,000	240,000,000
L	0.27	2.7	27	270	2,700	27,000	270,000	2,700,000	27,000,000	270,000,000
M	0.30	3.0	30	300	3,000	30,000	300,000	3,000,000	30,000,000	300,000,000
N	0.33	3.3	33	330	3,300	33,000	330,000	3,300,000	33,000,000	330,000,000
P	0.36	3.6	36	360	3,600	36,000	360,000	3,600,000	36,000,000	360,000,000
Q	0.39	3.9	39	390	3,900	39,000	390,000	3,900,000	39,000,000	390,000,000
R	0.43	4.3	43	430	4,300	43,000	430,000	4,300,000	43,000,000	430,000,000
S	0.47	4.7	47	470	4,700	47,000	470,000	4,700,000	47,000,000	470,000,000
T	0.51	5.1	51	510	5,100	51,000	510,000	5,100,000	51,000,000	510,000,000
U	0.56	5.6	56	560	5,600	56,000	560,000	5,600,000	56,000,000	560,000,000
V	0.62	6.2	62	620	6,200	62,000	620,000	6,200,000	62,000,000	620,000,000
W	0.68	6.8	68	680	6,800	68,000	680,000	6,800,000	68,000,000	680,000,000
X	0.75	7.5	75	750	7,500	75,000	750,000	7,500,000	75,000,000	750,000,000
Y	0.82	8.2	82	820	8,200	82,000	820,000	8,200,000	82,000,000	820,000,000
Z	0.91	9.1	91	910	9,100	91,000	910,000	9,100,000	91,000,000	910,000,000
a	0.25	2.5	25	250	2,500	25,000	250,000	2,500,000	25,000,000	250,000,000
b	0.35	3.5	35	350	3,500	35,000	350,000	3,500,000	35,000,000	350,000,000
d	0.40	4.0	40	400	4,000	40,000	400,000	4,000,000	40,000,000	400,000,000
e	0.45	4.5	45	450	4,500	45,000	450,000	4,500,000	45,000,000	450,000,000
f	0.50	5.0	50	500	5,000	50,000	500,000	5,000,000	50,000,000	500,000,000
m	0.60	6.0	60	600	6,000	60,000	600,000	6,000,000	60,000,000	600,000,000
n	0.70	7.0	70	700	7,000	70,000	700,000	7,000,000	70,000,000	700,000,000
t	0.80	8.0	80	800	8,000	80,000	800,000	8,000,000	80,000,000	800,000,000
y	0.90	9.0	90	900	9,000	90,000	900,000	9,000,000	90,000,000	900,000,000

Tape & Reel Packaging Information

KEMET offers multilayer ceramic chip capacitors packaged in 8, 12 and 16 mm tape on 7" and 13" reels in accordance with EIA Standard 481. This packaging system is compatible with all tape-fed automatic pick and place systems. See Table 2 for details on reeling quantities for commercial chips.

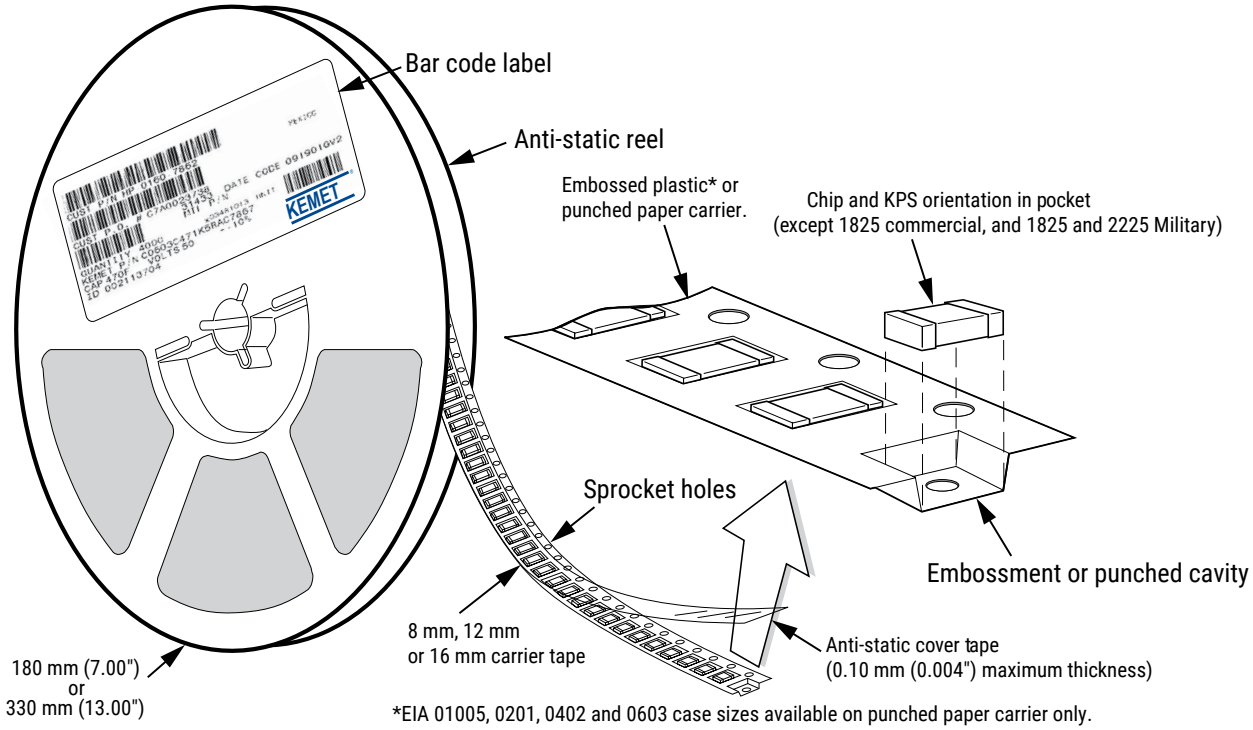

Table 4 – Carrier Tape Configuration, Embossed Plastic & Punched Paper (mm)

EIA Case Size	Tape Size (W)*	Embossed Plastic		Punched Paper	
		7" Reel	13" Reel	7" Reel	13" Reel
		Pitch (P_1)*		Pitch (P_1)*	
01005 – 0402	8			2	2
0603	8			4	4
0805	8	4	4	4	4
1206 – 1210	8	4	4	4	4
1805 – 1808	12	4	4		
≥ 1812	12	8	8		
KPS 1210	12	8	8		
KPS 1812 and 2220	16	12	12		
Array 0612	8	4	4		

**Refer to Figures 1 and 2 for W and P_1 carrier tape reference locations.*
**Refer to Tables 5 and 6 for tolerance specifications.*

Figure 1 – Embossed (Plastic) Carrier Tape Dimensions

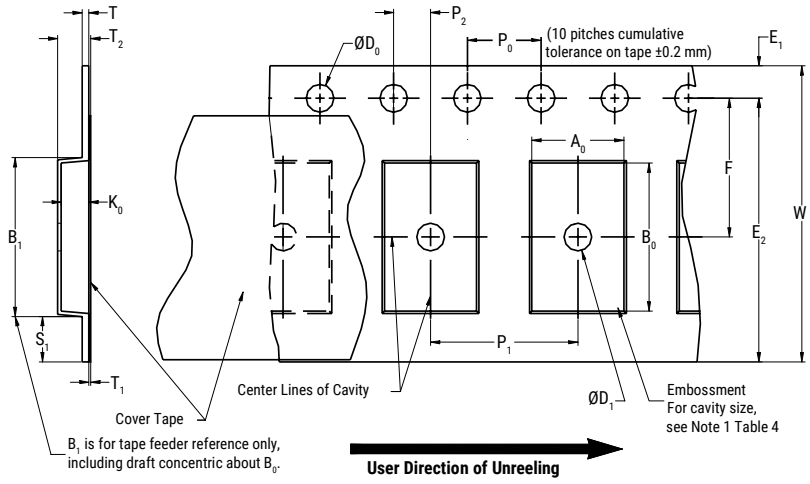

Table 5 – Embossed (Plastic) Carrier Tape Dimensions

Metric will govern

Constant Dimensions — Millimeters (Inches)									
Tape Size	D_0	D_1 Minimum Note 1	E_1	P_0	P_2	R Reference Note 2	S_1 Minimum Note 3	T Maximum	T_1 Maximum
8 mm	1.5 +0.10/−0.0 (0.059 +0.004/−0.0)	1.0 (0.039)	1.75 ±0.10 (0.069 ±0.004)	4.0 ±0.10 (0.157 ±0.004)	2.0 ±0.05 (0.079 ±0.002)	25.0 (0.984)	0.600 (0.024)	0.600 (0.024)	0.100 (0.004)
12 mm		1.5 (0.059)				30 (1.181)			
16 mm									
24 mm	1.5 +0.10/−0.0 (0.059 +0.004/−0.0)	1.5 (0.059)	1.75 ±0.10 (0.069 ±0.004)	4.0 ±0.10 (0.157 ±0.004)	2.0 ±0.10 (0.078 ±0.003)	30 (1.181)	5 (0.196)	0.250 (0.009)	0.350 (0.013)

Variable Dimensions — Millimeters (Inches)								
Tape Size	Pitch	B_1 Maximum Note 4	E_2 Minimum	F	P_1	T_2 Maximum	W Maximum	A_0,B_0 & K_0
8 mm	Single (4 mm)	4.35 (0.171)	6.25 (0.246)	3.5 ±0.05 (0.138 ±0.002)	4.0 ±0.10 (0.157 ±0.004)	2.5 (0.098)	8.3 (0.327)	Note 5
12 mm	Single (4 mm) and Double (8 mm)	8.2 (0.323)	10.25 (0.404)	5.5 ±0.05 (0.217 ±0.002)	8.0 ±0.10 (0.315 ±0.004)	4.6 (0.181)	12.3 (0.484)	
16 mm	Triple (12 mm)	12.1 (0.476)	14.25 (0.561)	7.5 ±0.05 (0.138 ±0.002)	12.0 ±0.10 (0.157 ±0.004)	4.6 (0.181)	16.3 (0.642)	
24 mm	16 mm	11.5 (0.452)	22.25 (0.875)	11.5 ±0.10 (0.452 ±0.003)	16.0 ±0.10 (0.629 ±0.004)	3 (0.118)	24.3 (0.956)	

1. The embossment hole location shall be measured from the sprocket hole controlling the location of the embossment. Dimensions of embossment location and hole location shall be applied independent of each other.
2. The tape with or without components shall pass around R without damage (see Figure 6).
3. If S_1 < 1.0 mm, there may not be enough area for cover tape to be properly applied (see EIA Standard 481 paragraph 4.3 section b).
4. B_1 dimension is a reference dimension for tape feeder clearance only.
5. The cavity defined by A_0, B_0 and K_0 shall surround the component with sufficient clearance that:
(a) the component does not protrude above the top surface of the carrier tape.
(b) the component can be removed from the cavity in a vertical direction without mechanical restriction, after the top cover tape has been removed.
(c) rotation of the component is limited to 20° maximum for 8 and 12 mm tapes and 10° maximum for 16 mm tapes (see Figure 3).
(d) lateral movement of the component is restricted to 0.5 mm maximum for 8 and 12 mm wide tape and to 1.0 mm maximum for 16 mm tape (see Figure 4).
(e) for KPS product, A_0 and B_0 are measured on a plane 0.3 mm above the bottom of the pocket.
(f) see addendum in EIA Standard 481 for standards relating to more precise taping requirements.

Figure 2 – Punched (Paper) Carrier Tape Dimensions

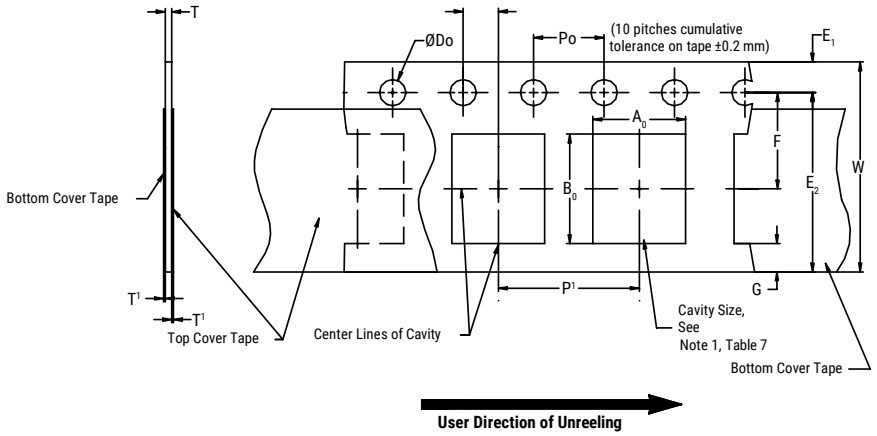

Table 6 – Punched (Paper) Carrier Tape Dimensions

Metric will govern

Constant Dimensions — Millimeters (Inches)							
Tape Size	D_0	E_1	P_0	P_2	T_1 Maximum	G Minimum	R Reference Note 2
8 mm	1.5 +0.10 -0.0 (0.059 +0.004 -0.0)	1.75 ±0.10 (0.069 ±0.004)	4.0 ±0.10 (0.157 ±0.004)	2.0 ±0.05 (0.079 ±0.002)	0.10 (0.004) Maximum	0.75 (0.030)	25 (0.984)

Variable Dimensions — Millimeters (Inches)							
Tape Size	Pitch	E2 Minimum	F	P_1	T Maximum	W Maximum	A_0 B_0
8 mm	Half (2 mm)	6.25 (0.246)	3.5 ±0.05 (0.138 ±0.002)	2.0 ±0.05 (0.079 ±0.002)	1.1 (0.043)	8.3 (0.327)	Note 1
8 mm	Single (4 mm)			4.0 ±0.10 (0.157 ±0.004)		8.3 (0.327)	

1. The cavity defined by A_0, B_0 and T shall surround the component with sufficient clearance that:
a) the component does not protrude beyond either surface of the carrier tape.
b) the component can be removed from the cavity in a vertical direction without mechanical restriction, after the top cover tape has been removed.
c) rotation of the component is limited to 20° maximum (see Figure 3).
d) lateral movement of the component is restricted to 0.5 mm maximum (see Figure 4).
e) see addendum in EIA Standard 481 for standards relating to more precise taping requirements.
2. The tape with or without components shall pass around R without damage (see Figure 6).

Packaging Information Performance Notes

1. Cover Tape Break Force: 1.0 kg minimum.
2. Cover Tape Peel Strength: The total peel strength of the cover tape from the carrier tape shall be:

Tape Width	Peel Strength
8 mm	0.1 to 1.0 Newton (10 to 100 gf)
12 and 16 mm	0.1 to 1.3 Newton (10 to 130 gf)

The direction of the pull shall be opposite the direction of the carrier tape travel. The pull angle of the carrier tape shall be 165° to 180° from the plane of the carrier tape. During peeling, the carrier and/or cover tape shall be pulled at a velocity of 300 ±10 mm/minute.
3. Labeling: Bar code labeling (standard or custom) shall be on the side of the reel opposite the sprocket holes. *Refer to EIA Standards 556 and 624.*

Figure 3 – Maximum Component Rotation

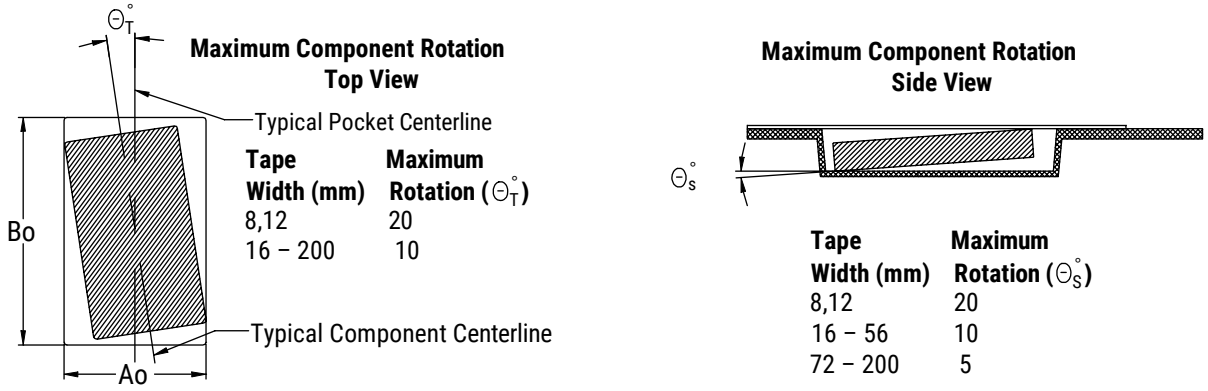

Tape Width (mm)	Maximum Rotation (Θ_T°)
8,12	20
16 – 200	10

Tape Width (mm)	Maximum Rotation (Θ_S°)
8,12	20
16 – 56	10
72 – 200	5

Figure 4 – Maximum Lateral Movement

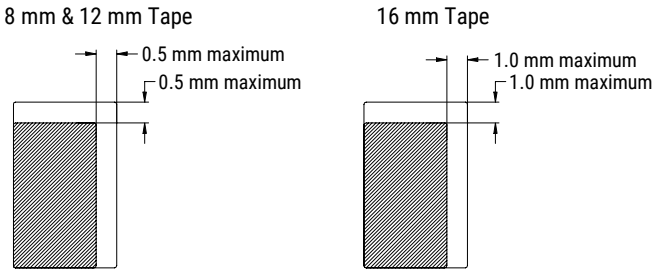

Figure 5 – Bending Radius

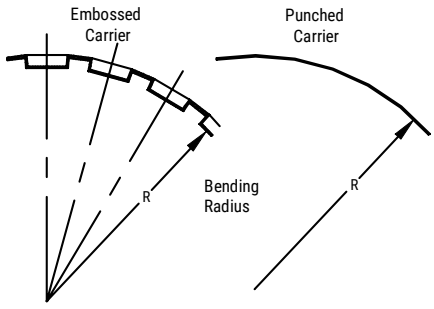

Figure 6 – Reel Dimensions

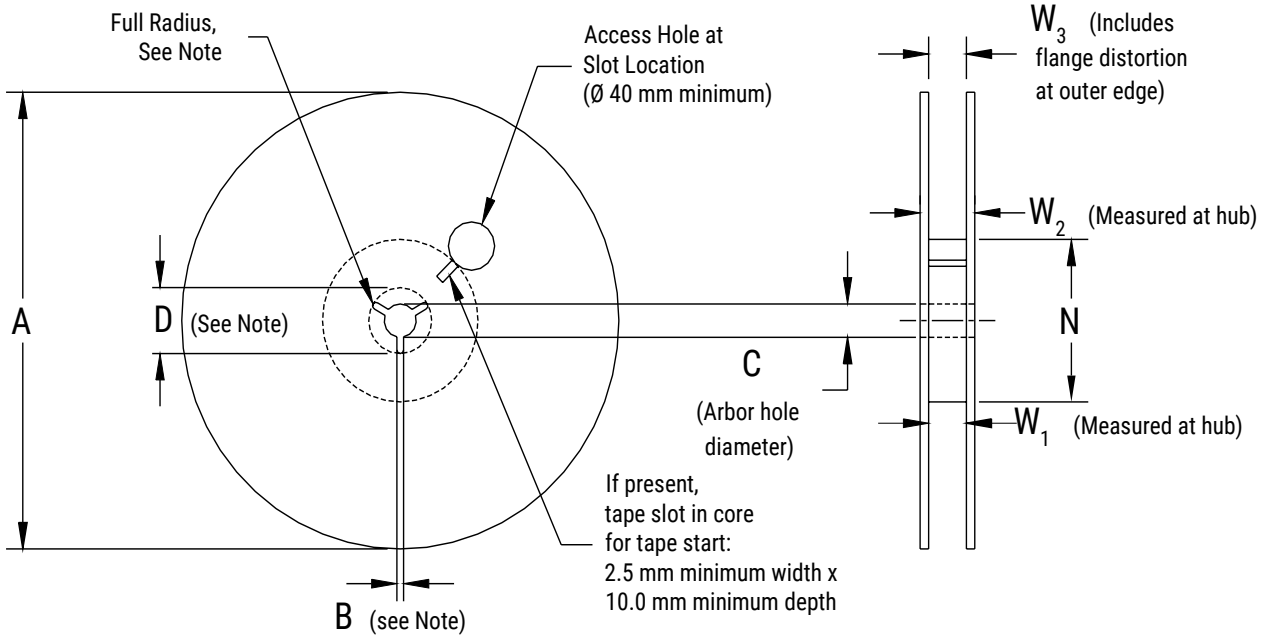

Note: Drive spokes optional; if used, dimensions B and D shall apply.

Table 7 – Reel Dimensions

Metric will govern

Constant Dimensions — Millimeters (Inches)				
Tape Size	A	B Minimum	C	D Minimum
8 mm	178 ±0.20 (7.008 ±0.008) or 330 ±0.20 (13.000 ±0.008)	1.5 (0.059)	13.0 +0.5/−0.2 (0.521 +0.02/−0.008)	20.2 (0.795)
12 mm				
16 mm				
24 mm		1.2 (0.047)	13.0 ±0.2 (0.521 ±0.008)	21 (0.826)

Variable Dimensions — Millimeters (Inches)				
Tape Size	N Minimum	W_1	W_2 Maximum	W_3
8 mm	50 (1.969)	8.4 +1.5/−0.0 (0.331 +0.059/−0.0)	14.4 (0.567)	Shall accommodate tape width without interference
12 mm		12.4 +2.0/−0.0 (0.488 +0.078/−0.0)	18.4 (0.724)	
16 mm		16.4 +2.0/−0.0 (0.646 +0.078/−0.0)	22.4 (0.882)	
24 mm		25 +1.0/−0.0 (0.984 +0.039/−0.0)	27.4 ±1.0 (1.078 ±0.039)	

Figure 7 – Tape Leader & Trailer Dimensions

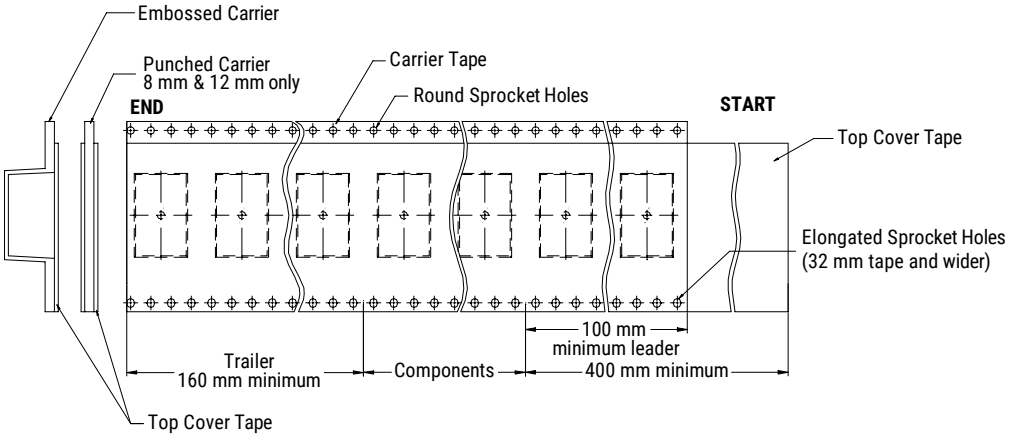

Figure 8 – Maximum Camber

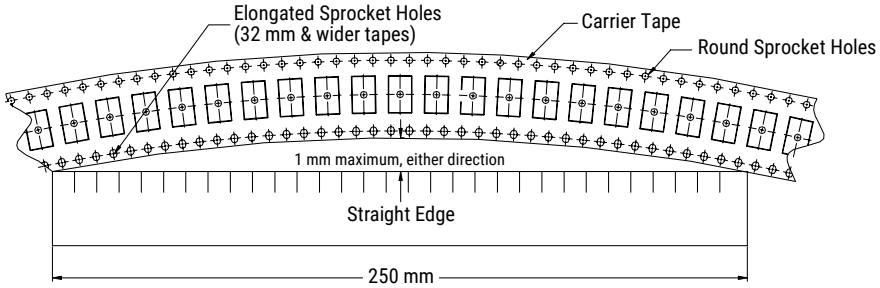

KEMET Electronics Corporation Sales Offices

For a complete list of our global sales offices, please visit https://www.yageogroup.com/SalesResources/SalesOffices

Disclaimer

YAGEO Corporation and its affiliates do not recommend the use of commercial or automotive grade products for high reliability applications or manned space flight.

All product specifications, statements, information and data (collectively, the "Information") in this datasheet are subject to change. The customer is responsible for checking and verifying the extent to which the Information contained in this publication is applicable to an order at the time the order is placed. All Information given herein is believed to be accurate and reliable, but it is presented without guarantee, warranty, or responsibility of any kind, expressed or implied.

Statements of suitability for certain applications are based on KEMET Electronics Corporation's ("KEMET") knowledge of typical operating conditions for such applications, but are not intended to constitute – and KEMET specifically disclaims – any warranty concerning suitability for a specific customer application or use. The Information is intended for use only by customers who have the requisite experience and capability to determine the correct products for their application. Any technical advice inferred from this Information or otherwise provided by KEMET with reference to the use of KEMET's products is given gratis, and KEMET assumes no obligation or liability for the advice given or results obtained.

Although KEMET designs and manufactures its products to the most stringent quality and safety standards, given the current state of the art, isolated component failures may still occur. Accordingly, customer applications which require a high degree of reliability or safety should employ suitable designs or other safeguards (such as installation of protective circuitry or redundancies) in order to ensure that the failure of an electrical component does not result in a risk of personal injury or property damage.

Although all product–related warnings, cautions and notes must be observed, the customer should not assume that all safety measures are indicated or that other measures may not be required.

KEMET is a registered trademark of KEMET Electronics Corporation.