ALS70A163QS450

ALS70, Aluminum Electrolytic, 16,000 uF, 20%, 450 VDC, -40/+85°C, 31.8 mm

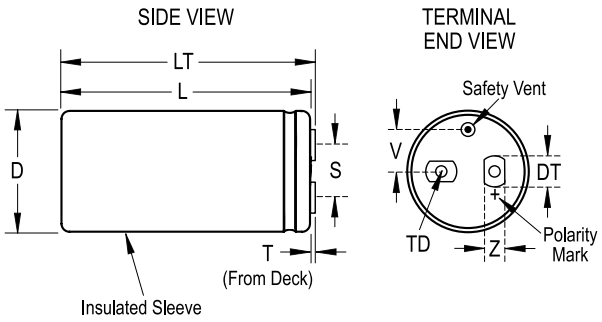

Click here for the 3D model.

General Information	
Series	ALS70
Dielectric	Aluminum Electrolytic
Description	Screw Terminal, Aluminum Electrolytic
RoHS	Yes
Mounting	Through-Hole
Halogen Free	Yes
Typical Component Weight	1,800 g
Notes	Dimensions D And L Include Sleeving. MS (MxH) = M12x16. Mounting Clamp (Sold Separately): V90N
Shelf Life	156 Weeks

Dimensions	
D	90mm +/-1mm
L	194mm +/-2mm
T	5.5mm +/-0.5mm
S	31.8mm +/-0.5mm
DT	13mm +/-0.5mm
LT	198mm +/-1mm
TD	10mm MIN
V	25mm NOM
Z	10mm NOM

Packaging Specifications	
Sleeving	Yes
Packaging	Tray

Specifications	
Capacitance	16,000 uF
Tolerance	20%
Voltage DC	450 VDC, 495 VDC (Surge)
Temperature Range	-40/+85°C
Rated Temperature	85°C
Life	20000 Hrs (Rated Voltage And Ripple Current At 85C), 40000 Hrs (Rated Voltage At 85C)
ESR	16 mOhms (100Hz 20C), 12 mOhms (10kHz 20C)
Ripple Current	27.2 Amps (100Hz 85C), 36.2 Amps (10kHz 85C)
Leakage Current	6000 uA

Statements of suitability for certain applications are based on our knowledge of typical operating conditions for such applications, but are not intended to constitute - and we specifically disclaim - any warranty concerning suitability for a specific customer application or use. This Information is intended for use only by customers who have the requisite experience and capability to determine the correct products for their application. Any technical advice inferred from this Information or otherwise provided by us with reference to the use of our products is given gratis, and we assume no obligation or liability for the advice given or results obtained.

© 2006 - 2026 YAGEO