AS0805JRX7R0BB222

Please contact sales for availability

AS, Ceramic, 2,200 pF, 5%, 100 VDC, X7R, SMD, MLCC, Automotive, 0805 / 2012

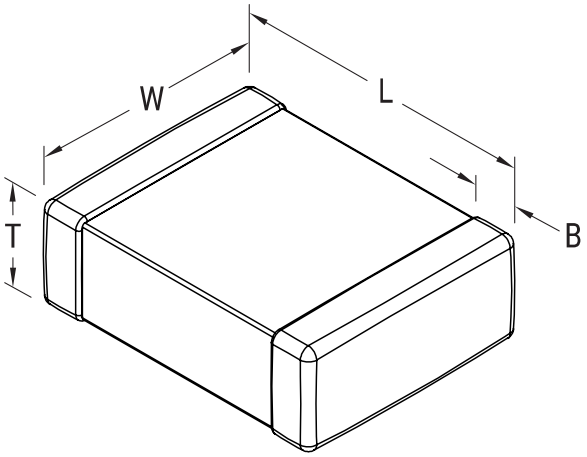

Click here for the 3D model.

General Information	
Series	AS
Style	SMD Chip
Description	SMD, MLCC, Automotive
Features	Automotive
RoHS	Yes
Termination	Flexible Termination
MSL	1

Dimensions	
L	2mm +/-0.3mm
W	1.25mm +/-0.2mm
T	0.85mm +/-0.15mm
B	0.5mm +/-0.25mm
Case Code (EIA / mm)	0805 / 2012

Packaging Specifications	
Packaging	T&R, 178mm, Paper Tape
Packaging Quantity	4000

Specifications	
Capacitance	2,200 pF
Tolerance	5%
Voltage DC	100 VDC
Temperature Range	-55/+125°C
Temp. Coefficient	X7R
Dissipation Factor	2.5%
Insulation Resistance	227.2727 MOhms

Statements of suitability for certain applications are based on our knowledge of typical operating conditions for such applications, but are not intended to constitute - and we specifically disclaim - any warranty concerning suitability for a specific customer application or use. This Information is intended for use only by customers who have the requisite experience and capability to determine the correct products for their application. Any technical advice inferred from this Information or otherwise provided by us with reference to the use of our products is given gratis, and we assume no obligation or liability for the advice given or results obtained.

© 2006 - 2026 YAGEO