C44BXFP4100ZB0J

C44B, Film, Metallized Polypropylene, Power, 1 uF, 5%, 2,400 VDC, 1,000 VAC, 22.3 mm

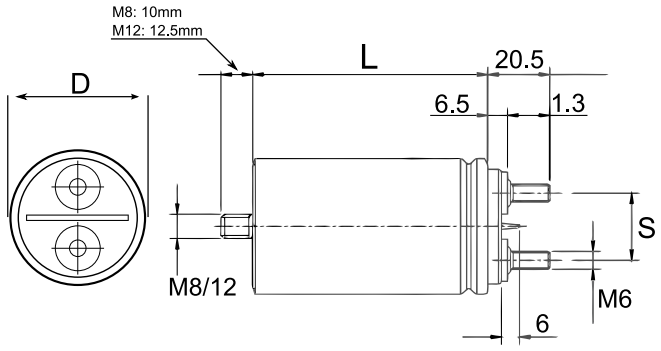

Click here for the 3D model.

General Information	
Series	C44B
Dielectric	Metallized Polypropylene
Style	Can
RoHS	With Exemptions
REACH	SVHC (Pb – CAS 7439-92-1), SVHC (DBDPE -CAS 84852-53-9)
SCIP Number	cc1c1ec4-db9e-4815-b26b-e8a34ddfb776
Lead	Threaded Studs M6
Typical Component Weight	315 g
Miscellaneous	Peak Voltage = 4000 VDC.

Dimensions	
D	50mm +/-0.5mm
L	100mm +/-2mm
S	22.3mm +/-0.5mm

Packaging Specifications	
Terminal Type	Bolt - M8x10
Packaging	Bulk, Bag
Packaging Quantity	20

Specifications	
Capacitance	1 uF
Tolerance	5%
Voltage DC	2400 VDC
Voltage AC	1000 VAC
Temperature Range	-40/+85°C
Rated Temperature	70°C
Max dV/dt	500 V/us
Ripple Current	15 Amps, 500 Amps (Peak)

Statements of suitability for certain applications are based on our knowledge of typical operating conditions for such applications, but are not intended to constitute - and we specifically disclaim - any warranty concerning suitability for a specific customer application or use. This Information is intended for use only by customers who have the requisite experience and capability to determine the correct products for their application. Any technical advice inferred from this Information or otherwise provided by us with reference to the use of our products is given gratis, and we assume no obligation or liability for the advice given or results obtained.

© 2006 - 2026 YAGEO