C44UOGT7274M32K

C44U-M, Film, Metallized Polypropylene, DC Link, 2,740 uF, 10%, 900 VDC, 50 mm

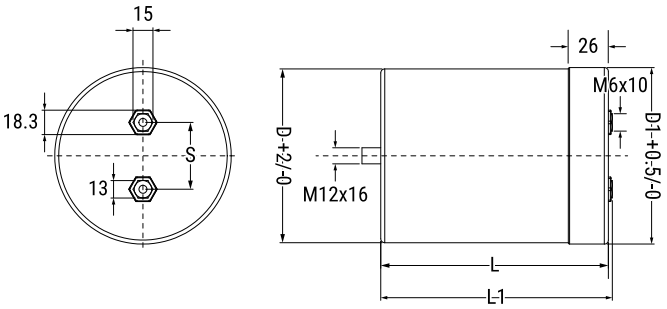

Click here for the 3D model.

General Information	
Series	C44U-M
Dielectric	Metallized Polypropylene
Style	Can
Features	DC Filtering, Energy Storage
RoHS	With Exemptions
REACH	SVHC (Pb – CAS 7439-92-1)
Lead	Screw Terminals M6
Typical Component Weight	3,600 g
Miscellaneous	Thermal Resistance = 2.6 C/W. Weight = 15000 grams.

Dimensions	
D	136mm +2mm
L	232mm +/-2mm
L1	235mm +/-2mm
S	50mm +/-0.3mm
D1	139mm +0.5mm

Packaging Specifications	
Terminal Type	Bolt - M12x16
Packaging	Bulk, Bag
Packaging Quantity	4

Specifications	
Capacitance	2,740 uF
Tolerance	10%
Voltage DC	900 VDC
Temperature Range	-40/+85°C
Rated Temperature	75°C
Insulation Resistance	10 MOhms
Max dV/dt	4 V/us
Ripple Current	100 Amps (1kHz 40C), 11000 Amps (Peak)
Inductance	80 nH

Statements of suitability for certain applications are based on our knowledge of typical operating conditions for such applications, but are not intended to constitute - and we specifically disclaim - any warranty concerning suitability for a specific customer application or use. This Information is intended for use only by customers who have the requisite experience and capability to determine the correct products for their application. Any technical advice inferred from this Information or otherwise provided by us with reference to the use of our products is given gratis, and we assume no obligation or liability for the advice given or results obtained.

© 2006 - 2026 YAGEO