C44UVGT6220M51K

C44U-M, Film, Metallized Polypropylene, DC Link, 220 uF, 10%, 1,800 VDC, 50 mm

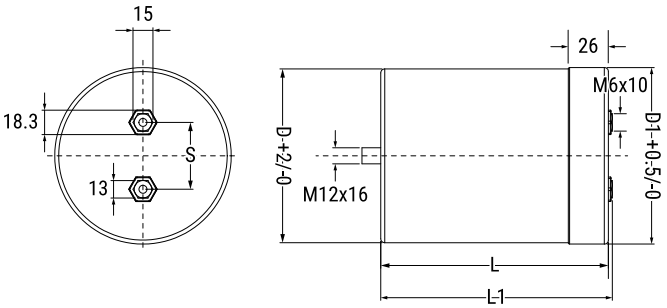

Click here for the 3D model.

General Information	
Series	C44U-M
Dielectric	Metallized Polypropylene
Style	Can
Features	DC Filtering, Energy Storage
RoHS	With Exemptions
REACH	SVHC (Pb – CAS 7439-92-1)
SCIP Number	cc1c1ec4-db9e-4815-b26b-e8a34ddfb776
Lead	Screw Terminals M6
Typical Component Weight	1,800 g
Miscellaneous	Thermal Resistance = 3.7 C/W. Weight = 7300 grams.

Dimensions	
D	116mm +2mm
L	133mm +/-2mm
L1	136mm +/-2mm
S	50mm +/-0.3mm
D1	119mm +0.5mm

Packaging Specifications	
Terminal Type	Bolt - M12x16
Packaging	Bulk, Bag
Packaging Quantity	4

Specifications	
Capacitance	220 uF
Tolerance	10%
Voltage DC	1800 VDC
Temperature Range	-40/+85°C
Rated Temperature	75°C
Insulation Resistance	140 MOhms
Max dV/dt	14 V/us
Ripple Current	60 Amps (10kHz 40C), 3120 Amps (Peak)
Inductance	50 nH

Statements of suitability for certain applications are based on our knowledge of typical operating conditions for such applications, but are not intended to constitute - and we specifically disclaim - any warranty concerning suitability for a specific customer application or use. This Information is intended for use only by customers who have the requisite experience and capability to determine the correct products for their application. Any technical advice inferred from this Information or otherwise provided by us with reference to the use of our products is given gratis, and we assume no obligation or liability for the advice given or results obtained.

© 2006 - 2026 YAGEO

C44UVGT6220M51K

C44U-M, Film, Metallized Polypropylene, DC Link, 220 uF, 10%, 1,800 VDC, 50 mm

Simulations

For the complete simulation environment please visit Y-SIM.

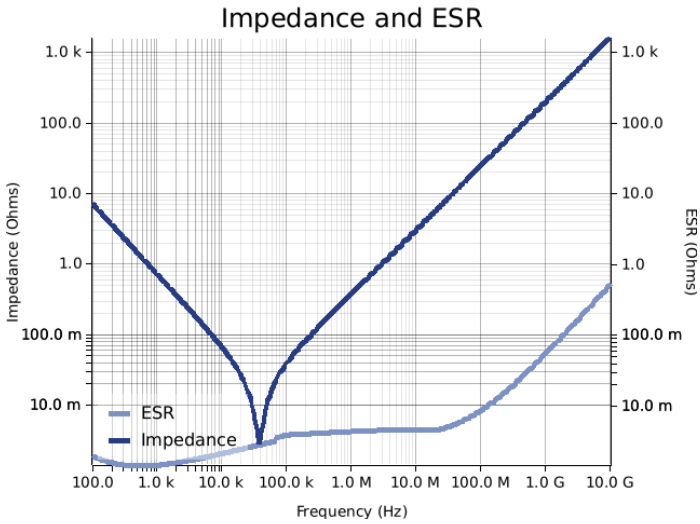

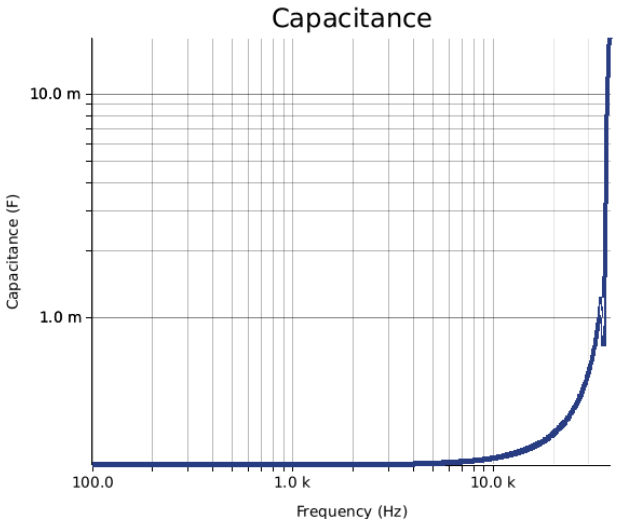

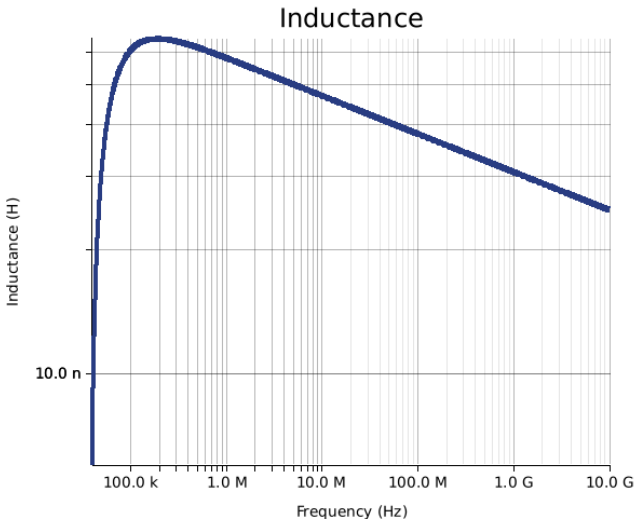

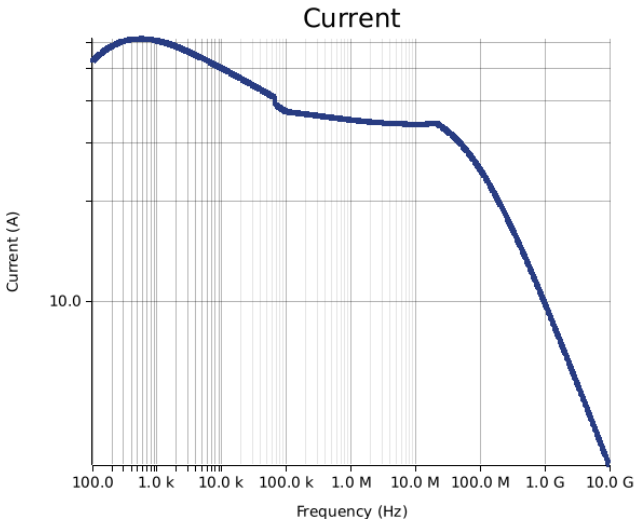

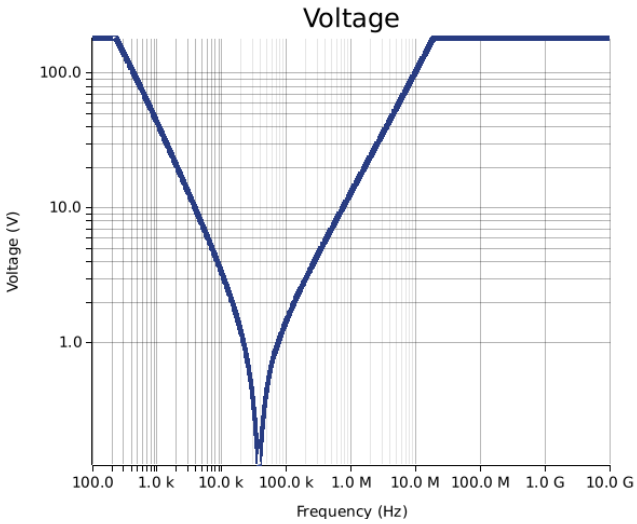

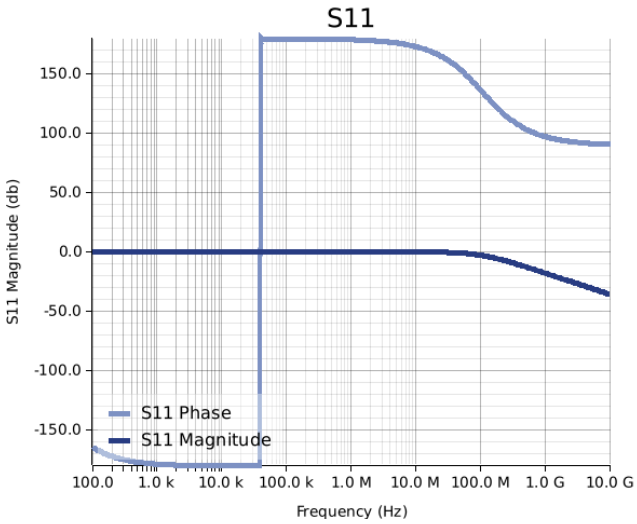

© 2006 - 2026 YAGEO

C44UVGT6220M51K

C44U-M, Film, Metallized Polypropylene, DC Link, 220 uF, 10%, 1,800 VDC, 50 mm

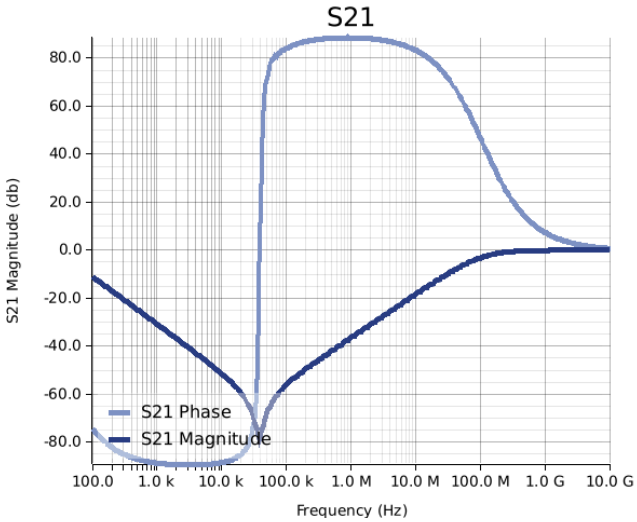

© 2006 - 2026 YAGEO

C44UVGT6220M51K

C44U-M, Film, Metallized Polypropylene, DC Link, 220 uF, 10%, 1,800 VDC, 50 mm

These are simulations.
This is not a specification!

The responses shown represent the typical response for each part type. Specific responses may vary, depending on manufacturing variation affects of all parameters involved, including the specified tolerances applied to capacitance and unspecified variations of ESR, ESL, and leakage resistance.

The responses shown do not represent a specified or implied maximum capability of the device for all applications.

- The ESR used for ripple “Ripple Current/Voltage vs. Frequency” plots is the ESR at ambient temperature.
- The ESR in the “Temperature Rise vs. Ripple Current” plots is adjusted to each incremental temperature rise before the power and ripple current is calculated.
- The effects shown herein are based on measured data from a multiple part sample of the parts in question.
- Ripple capability of this device will be factored by thermal resistance (Rth) created by circuit traces (addi affects of all parameters involved, including the specified tolerances applied to capacitance and unspecified variations of ESR, ESL, and leakage resistance.
- The peak voltages generated in the “Temperature Rise vs. Combined Ripple Currents” plot are calculated for each frequency and are not combined with voltages generated at any other harmonics.
- Please consult with the catalog or field applications engineer for maximum capability of the device in specific applications.

All product information and data (collectively, the “Information”) are subject to change without notice.

KEMET K-SIM is designed to simulate behavior of components with respect to frequency, ambient temperature, and DC bias levels. The responses shown represent the typical response for each part type. Specific responses may vary, depending on manufacturing variation effects of all parameters involved, including the specified tolerances applied to capacitance and unspecified variations of ESR, ESL, and leakage resistance.

All Information given herein is believed to be accurate and reliable, but is presented without guarantee, warranty, or responsibility of any kind, expressed or implied. Statements of suitability for certain applications are based on our knowledge of typical operating conditions for such applications, but are not intended to constitute – and we specifically disclaim – any warranty concerning suitability for a specific customer application or use. This Information is intended for use only by customers who have the requisite experience and capability to determine the correct products for their application. Any technical advice inferred from this Information or otherwise provided by us with reference to the use of our products is given gratis, and we assume no obligation or liability for the advice given or results obtained.

If you have any questions please contact K-SIM.

© 2006 - 2026 YAGEO