PFR5332J100J12L4BULK

Aliases (F411JK332J100C)

PFR/F411, Film, Film/Foil Polypropylene, General Purpose, 3,300 pF, 5%, 100 VDC, 85°C, 5 mm

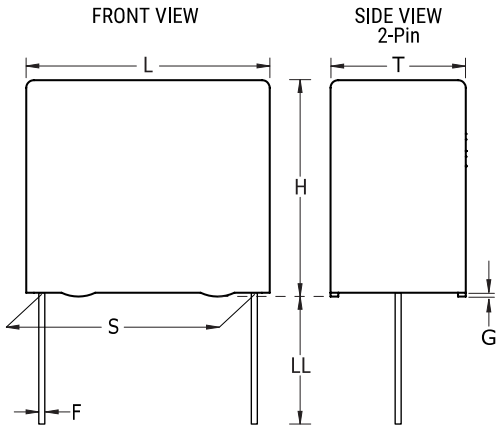

Click here for the 3D model.

General Information	
Series	PFR/F411
Dielectric	Film/Foil Polypropylene
Style	Radial
Features	Pulse
RoHS	Yes
Termination	Tinned Wire
Lead	Wire Leads
Typical Component Weight	0.625 g
Miscellaneous	An Operating Temperature Up To +105C Is Allowed Under Certain Conditions. Please Consult KEMET For Details.

Dimensions	
L	7.2mm -0.5mm
H	7mm -0.5mm
T	5.5mm -0.5mm
S	5mm -0.4mm
LL	4mm +1mm
F	0.5mm +/-0.05mm
G	0.5mm NOM

Packaging Specifications	
Packaging	Bulk, Bag
Packaging Quantity	1000

Specifications	
Capacitance	3,300 pF
Tolerance	5%
Voltage DC	100 VDC
Voltage AC	63 VAC
Temperature Range	-55/+100°C
Rated Temperature	85°C
Dissipation Factor	0.04% 1kHz, 0.05% 10kHz, 0.07% 100kHz
Insulation Resistance	100 GOhms
Max dV/dt	1,000 V/us
Inductance	6 nH

Statements of suitability for certain applications are based on our knowledge of typical operating conditions for such applications, but are not intended to constitute - and we specifically disclaim - any warranty concerning suitability for a specific customer application or use. This Information is intended for use only by customers who have the requisite experience and capability to determine the correct products for their application. Any technical advice inferred from this Information or otherwise provided by us with reference to the use of our products is given gratis, and we assume no obligation or liability for the advice given or results obtained.

© 2006 - 2026 YAGEO