PHE448SB4150JR06

Aliases (F448BJ152J2K0C)

Not for New Design

PHE448/F448, Film, Film/Foil Polypropylene, General Purpose, 1,500 pF, 5%, 2,000 VDC, 85°C, 15 mm

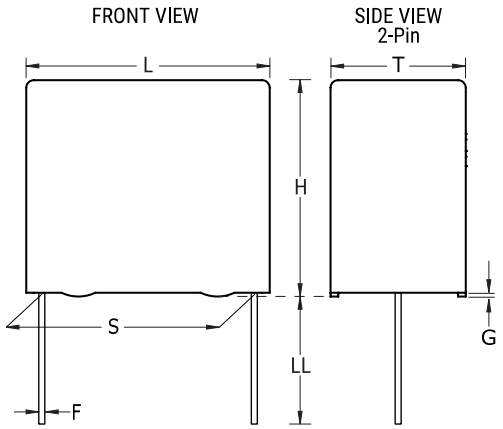

Click here for the 3D model.

General Information	
Series	PHE448/F448
Dielectric	Film/Foil Polypropylene
Style	Radial
Features	Pulse
RoHS	Yes
Termination	Tinned Wire
Lead	Wire Leads
Typical Component Weight	2 g
Miscellaneous	Rthha= 82 C/W (85C), 0.2 m/s.
Notes	Not For New Design, Series Replaced by R73.

Dimensions	
L	18mm -0.5mm
H	12.5mm -0.5mm
T	6.5mm -0.5mm
S	15mm +/-0.4mm
LL	6mm -1mm
F	0.8mm +/-0.05mm
G	0.5mm NOM

Specifications	
Capacitance	1,500 pF
Tolerance	5%
Voltage DC	2000 VDC, 1480 VDC (105C)
Voltage AC	700 VAC
Temperature Range	-55/+105°C
Rated Temperature	85°C
Dissipation Factor	0.03% 1kHz, 0.05% 10kHz, 0.1% 100kHz
Insulation Resistance	20 GOhms
Max dV/dt	25,000 V/us
Inductance	6 nH

Packaging Specifications	
Packaging	Bulk, Bag
Packaging Quantity	1000

Statements of suitability for certain applications are based on our knowledge of typical operating conditions for such applications, but are not intended to constitute - and we specifically disclaim - any warranty concerning suitability for a specific customer application or use. This Information is intended for use only by customers who have the requisite experience and capability to determine the correct products for their application. Any technical advice inferred from this Information or otherwise provided by us with reference to the use of our products is given gratis, and we assume no obligation or liability for the advice given or results obtained.

© 2006 - 2026 YAGEO