PHE450PB5100JR06

Aliases (F450BD103J1K0C)

Not for New Design

PHE450/F450, Film, Double Metallized Polypropylene, General Purpose, 0.01 uF, 5%, 1,000 VDC, 85°C, 15 mm

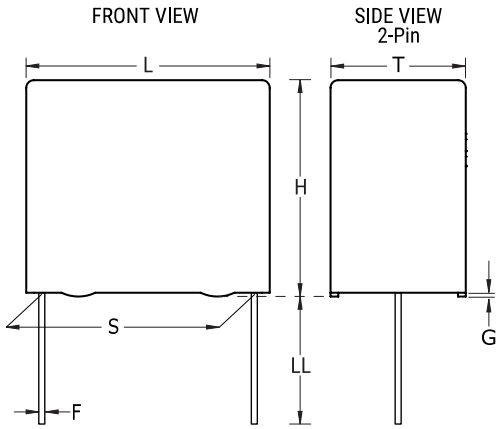

Click here for the 3D model.

General Information	
Series	PHE450/F450
Dielectric	Double Metallized Polypropylene
Style	Radial
Features	Pulse
RoHS	Yes
Termination	Tinned Wire
Lead	Wire Leads
Typical Component Weight	1.35 g
Miscellaneous	The Rated Voltage Decreases 1.3%/C Between +85C And +105C. Rthha= 99 C/W (85C), 0.2 m/s.
Notes	Series Replaced by R76.

Dimensions	
L	18mm -0.5mm
H	10.5mm -0.5mm
T	5.5mm -0.5mm
S	15mm +0.4/-0.4mm
LL	6mm -1mm
F	0.8mm +/-0.05mm
G	0.5mm NOM

Packaging Specifications	
Packaging	Bulk, Bag
Packaging Quantity	1000

Specifications	
Capacitance	0.01 uF
Tolerance	5%
Voltage DC	1000 VDC (85C), 740 VDC (105C)
Voltage AC	600 VAC
Temperature Range	-55/+105°C
Rated Temperature	85°C
Dissipation Factor	0.03% 1kHz, 0.04% 10kHz, 0.15% 100kHz
Insulation Resistance	100 GOhms
Max dV/dt	2,500 V/us
Inductance	6 nH

Statements of suitability for certain applications are based on our knowledge of typical operating conditions for such applications, but are not intended to constitute - and we specifically disclaim - any warranty concerning suitability for a specific customer application or use. This Information is intended for use only by customers who have the requisite experience and capability to determine the correct products for their application. Any technical advice inferred from this Information or otherwise provided by us with reference to the use of our products is given gratis, and we assume no obligation or liability for the advice given or results obtained.

© 2006 - 2026 YAGEO