# PHE450MK5150JR20

Aliases (F450KK153J630ALL0L)

Not for New Design

PHE450/F450, Film, Double Metallized Polypropylene, General Purpose, 0.015 uF, 5%, 630 VDC, 85°C, 7.5 mm

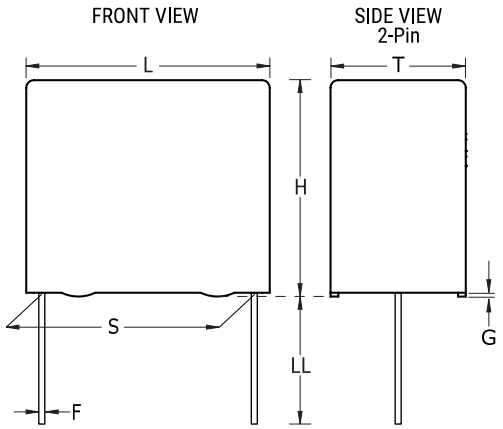


Click here for the 3D model.

| General Information | |
|---|---|
| Series | PHE450/F450 |
| Dielectric | Double Metallized Polypropylene |
| Style | Radial |
| Features | Pulse |
| RoHS | Yes |
| Termination | Tinned Wire |
| Lead | Wire Leads |
| Miscellaneous | The Rated Voltage Decreases 1.3%/C Between +85C And +105C. Rthha= 160 C/W (85C), 0.2 m/s. |
| Notes | Series Replaced by R76. |

| Dimensions | |
|---|---|
| L | 10mm -0.5mm |
| H | 11mm -0.5mm |
| T | 5mm -0.5mm |
| S | 7.5mm +0.4/-0.4mm |
| LL | 20mm +5mm |
| F | 0.6mm +/-0.05mm |
| G | 0.5mm NOM |

| Packaging Specifications | |
|---|---|
| Packaging | Bulk, Bag |
| Packaging Quantity | 1000 |

| Specifications | |
|---|---|
| Capacitance | 0.015 uF |
| Tolerance | 5% |
| Voltage DC | 630 VDC (85C), 466.2 VDC (105C) |
| Voltage AC | 300 VAC |
| Temperature Range | -55/+105°C |
| Rated Temperature | 85°C |
| Dissipation Factor | 0.03% 1kHz, 0.04% 10kHz, 0.15% 100kHz |
| Insulation Resistance | 100 GOhms |
| Max dV/dt | 1,400 V/us |
| Inductance | 6 nH |

Statements of suitability for certain applications are based on our knowledge of typical operating conditions for such applications, but are not intended to constitute - and we specifically disclaim - any warranty concerning suitability for a specific customer application or use. This Information is intended for use only by customers who have the requisite experience and capability to determine the correct products for their application. Any technical advice inferred from this Information or otherwise provided by us with reference to the use of our products is given gratis, and we assume no obligation or liability for the advice given or results obtained.



© 2006 - 2026 YAGEO