F461JM223J400A

Not for New Design

Recommended Replacement R75MC2220Z340J

F461, Film, Metallized Polypropylene, General Purpose, 0.022 uF, 5%, 400 VDC, 85°C, 5 mm

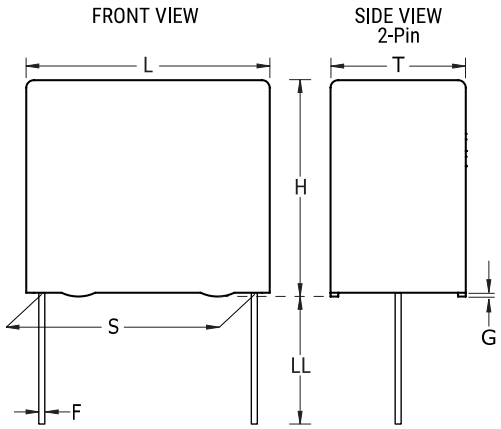

Click here for the 3D model.

General Information	
Series	F461
Dielectric	Metallized Polypropylene
Style	Radial
Features	MKP, Pulse
RoHS	Yes
Termination	Tinned Wire
Lead	Wire Leads
Typical Component Weight	0.58 g
Miscellaneous	The Rated Voltage Decreases 2%/C Between +85C And +105C (1.25%/C For AC). ClimCat: 55/105/56.
Notes	Series Replaced by R75

Dimensions	
L	7.2mm -0.5mm
H	9.5mm -0.5mm
T	4.5mm -0.5mm
S	5mm +/-0.4mm
LL	17mm +0/-1mm
F	0.5mm +/-0.05mm
G	0.5mm NOM

Packaging Specifications	
Packaging	Bulk, Bag
Packaging Quantity	2000

Specifications	
Capacitance	0.022 uF
Tolerance	5%
Voltage DC	400 VDC, 240 VDC (105C)
Voltage AC	220 VAC
Temperature Range	-55/+105°C
Rated Temperature	85°C
Dissipation Factor	0.04% 1kHz, 0.06% 10kHz, 0.25% 100kHz
Insulation Resistance	100 GOhms
Max dV/dt	400 V/us
Inductance	6 nH

Statements of suitability for certain applications are based on our knowledge of typical operating conditions for such applications, but are not intended to constitute - and we specifically disclaim - any warranty concerning suitability for a specific customer application or use. This Information is intended for use only by customers who have the requisite experience and capability to determine the correct products for their application. Any technical advice inferred from this Information or otherwise provided by us with reference to the use of our products is given gratis, and we assume no obligation or liability for the advice given or results obtained.

© 2006 - 2026 YAGEO