F612JF822J100C

Obsolete

F612, Film, Metallized Polyester Stacked, General Purpose, 8,200 pF, 5%, 100 VDC, 85°C, 5 mm

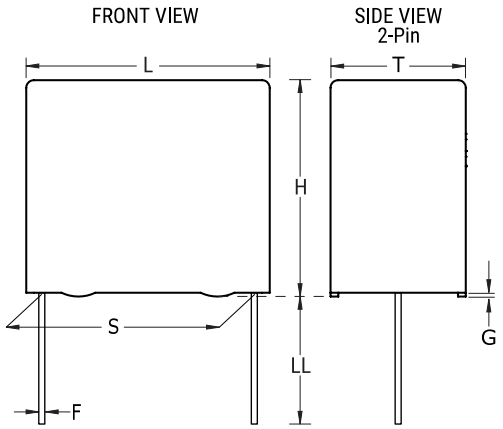

Click here for the 3D model.

General Information	
Series	F612
Dielectric	Metallized Polyester Stacked
Style	Radial
Features	MKT (Stacked), DC Multipurpose Applications
RoHS	Yes
Termination	Cut (Tinned Wire)
Lead	Cut/Short
Typical Component Weight	0.23 g
Miscellaneous	The Rated Voltage Decreases 1.25%/C Between +85C And +105C (For +125C, Please Consult KEMET). This 5% tolerance part is available on request. ClimCat: 55/105/56.

Dimensions	
L	7.2mm -0.5mm
H	6.5mm -0.5mm
T	2.5mm -0.5mm
S	5mm +/-0.4mm
LL	4mm +2mm
F	0.5mm +/-0.05mm
G	0.5mm NOM

Packaging Specifications	
Packaging	Bulk
Packaging Quantity	3000

Specifications	
Capacitance	8,200 pF
Tolerance	5%
Voltage DC	100 VDC, 75 VDC (105C)
Voltage AC	63 VAC
Temperature Range	-55/+105°C
Rated Temperature	85°C
Dissipation Factor	0.8% 1kHz, 1.2% 10kHz, 2.5% 100kHz
Insulation Resistance	15 GOhms
Max dV/dt	200 V/us
Inductance	6 nH

Statements of suitability for certain applications are based on our knowledge of typical operating conditions for such applications, but are not intended to constitute - and we specifically disclaim - any warranty concerning suitability for a specific customer application or use. This Information is intended for use only by customers who have the requisite experience and capability to determine the correct products for their application. Any technical advice inferred from this Information or otherwise provided by us with reference to the use of our products is given gratis, and we assume no obligation or liability for the advice given or results obtained.

© 2006 - 2026 YAGEO