PME271M533MR30

Aliases (P276QL333M275A)

PME271M/P276, Film, Metallized Paper, Safety, 0.033 uF, 20%, 630 VDC, 275 VAC (X2), 110°C, 15.2 mm

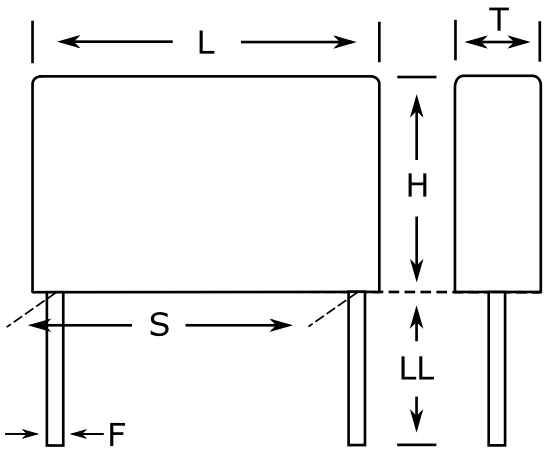

Click here for the 3D model.

General Information	
Series	PME271M/P276
Dielectric	Metallized Paper
Style	Radial
Features	EMI Safety
RoHS	Yes
Termination	Tinned Wire
Lead	Wire Leads
Safety Class	X2
Qualifications	ENEC, UL, cUL
Construction	Molded
Typical Component Weight	2.7 g
Miscellaneous	SRF= 8.4 MHz.

Dimensions	
L	18.5mm MAX
H	12.5mm MAX
T	6mm MAX
S	15.2mm +/-0.4mm
LL	30mm +5mm
F	0.8mm +/-0.05mm

Packaging Specifications	
Packaging	Bulk, Bag
Packaging Quantity	400

Specifications	
Capacitance	0.033 uF
Tolerance	20%
Voltage DC	630 VDC
Voltage AC	275 VAC (X2)
Temperature Range	-40/+110°C
Rated Temperature	110°C
Dissipation Factor	1.3% 1kHz
Insulation Resistance	12 GOhms
Max dV/dt	1,200 V/us

Statements of suitability for certain applications are based on our knowledge of typical operating conditions for such applications, but are not intended to constitute - and we specifically disclaim - any warranty concerning suitability for a specific customer application or use. This Information is intended for use only by customers who have the requisite experience and capability to determine the correct products for their application. Any technical advice inferred from this Information or otherwise provided by us with reference to the use of our products is given gratis, and we assume no obligation or liability for the advice given or results obtained.

© 2006 - 2026 YAGEO