PL-001L-W

Aliases (USEY001L0W0000)

KEMET, PL Lens, Proximity, SMD, Pyroelectric Infrared, Detection Up To 3.5 Meters

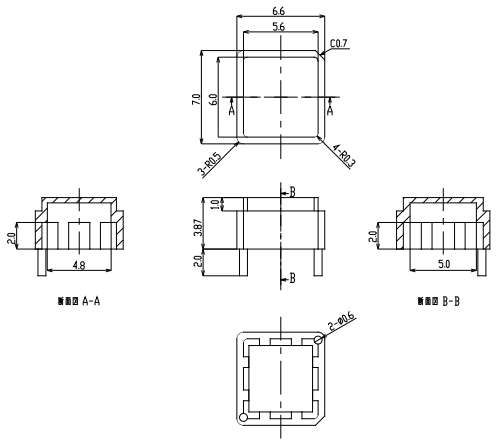

Click here for the 3D model.

General Information	
Series	PL Lens
Type	Proximity
Style	SMD
Description	Sensor Lens: White
Features	Detection Up To 3.5 Meters
RoHS	With Exemptions
REACH	SVHC (PZT – CAS 12626-81-2)
SCIP Number	b3250cc9-9746-4ec7-bd8a-a484c87e9021
Qualifications	REACH
Field of View	Horizontal +/- 37 degree, Vertical +/-28 degrees
Storage Temperature Range	-20/+70°C

Dimensions	
L	7mm NOM
W	6.6mm NOM
T	3.87mm NOM

Packaging Specifications	
Packaging	Tray, Box
Packaging Quantity	2000
Typical Component Weight	70 mg

Specifications	
Temperature Range	-20/+60°C

Statements of suitability for certain applications are based on our knowledge of typical operating conditions for such applications, but are not intended to constitute - and we specifically disclaim - any warranty concerning suitability for a specific customer application or use. This Information is intended for use only by customers who have the requisite experience and capability to determine the correct products for their application. Any technical advice inferred from this Information or otherwise provided by us with reference to the use of our products is given gratis, and we assume no obligation or liability for the advice given or results obtained.

© 2006 - 2026 YAGEO