R82EC3100DQ70J

Aliases (82EC3100DQ70J)

R82, Film, Metallized Polyester Stacked, Automotive Grade, 0.1 uF, 5%, 100 VDC, 85°C, 5 mm

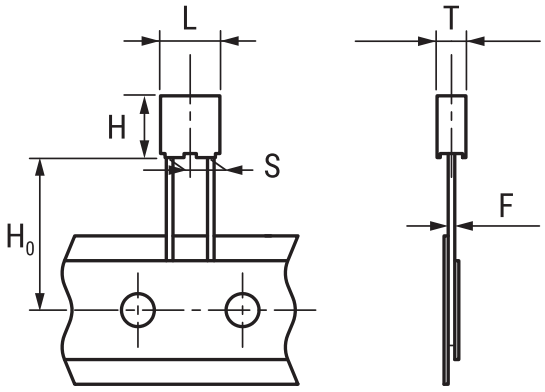

Click here for the 3D model.

General Information	
Series	R82
Dielectric	Metallized Polyester Stacked
Style	Radial
Features	Automotive Grade, DC Multipurpose Applications
RoHS	Yes
Termination	Tinned Wire
Lead	Wire Leads
Qualifications	AEC-Q200
Typical Component Weight	0.214 g
Miscellaneous	Above 85C DC And AC Voltage Derating Is 1.25%/C.

Dimensions	
L	7.2mm +0.2/-0.5mm
H	6.5mm +0.1/-0.5mm
T	2.5mm +0.1/-0.5mm
S	5mm +/-0.4mm
H0	18.5mm +/-0.5mm
F	0.5mm +/-0.05mm

Packaging Specifications	
Packaging	Ammo, 360x340x59mm, Box
Packaging Quantity	3500

Specifications	
Capacitance	0.1 uF
Tolerance	5%
Voltage DC	100 VDC
Voltage AC	63 VAC
Temperature Range	-55/+105°C
Rated Temperature	85°C
Dissipation Factor	0.8% 1kHz, 1.2% 10kHz, 2.5% 100kHz
Insulation Resistance	15 GOhms
Max dV/dt	200 V/us
Inductance	7 nH

Statements of suitability for certain applications are based on our knowledge of typical operating conditions for such applications, but are not intended to constitute - and we specifically disclaim - any warranty concerning suitability for a specific customer application or use. This Information is intended for use only by customers who have the requisite experience and capability to determine the correct products for their application. Any technical advice inferred from this Information or otherwise provided by us with reference to the use of our products is given gratis, and we assume no obligation or liability for the advice given or results obtained.

© 2006 - 2026 YAGEO